Operating Systems

2. Process Concept

Process: The Concept

- Process = A program in execution
  - Execution progress in a sequential fashion
- Example processes
  - OS kernel
  - OS shell
  - Program executing after compilation
  - www-browser
- Process management by OS
  - Allocate resources
    - Processor, main memory, I/O modules, timers, …
  - Schedule: Interleave their execution
    - Watch for processor utilization, response time
  - Inter-process communication, synchronization
    - Check potential deadlocks
    - Interleaving and non determinism imply increased difficulties!

The Process

A process consists of multiple parts

- Program code, also called text section
- Current activity including program counter, processor registers
- Stack containing temporary data
  - Function parameters, return addresses, local variables
- Data section containing global variables
- Heap containing memory dynamically allocated during run time

Process Address Space

- A list of memory locations from some min (usually 0) to some max that a process can read and write

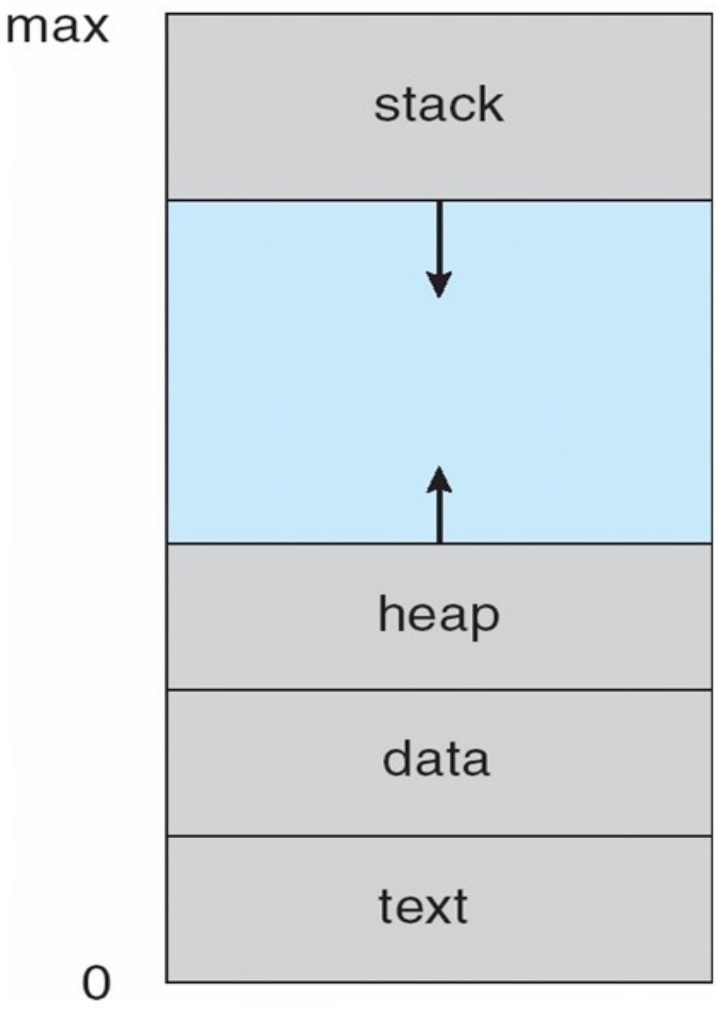

Relation Between Program And Process

- Program is passive entity, process is active
  - Program: Static code + static data
  - Process: Dynamic instantiation of code + data + more

- Program becomes process when executable file loaded into memory

- No 1 to 1 mapping between program and process
  - One program may run many processes
    - Separate execution sequences
  - Multiple users may execute the same program
    - Text section is equivalent

Process Control Block

- OS keeps all the data it needs about a process in the process control block (PCB)
  - Process state
  - Program counter
  - CPU registers
  - CPU scheduling information
  - Memory-management information
  - Accounting information
  - I/O status information

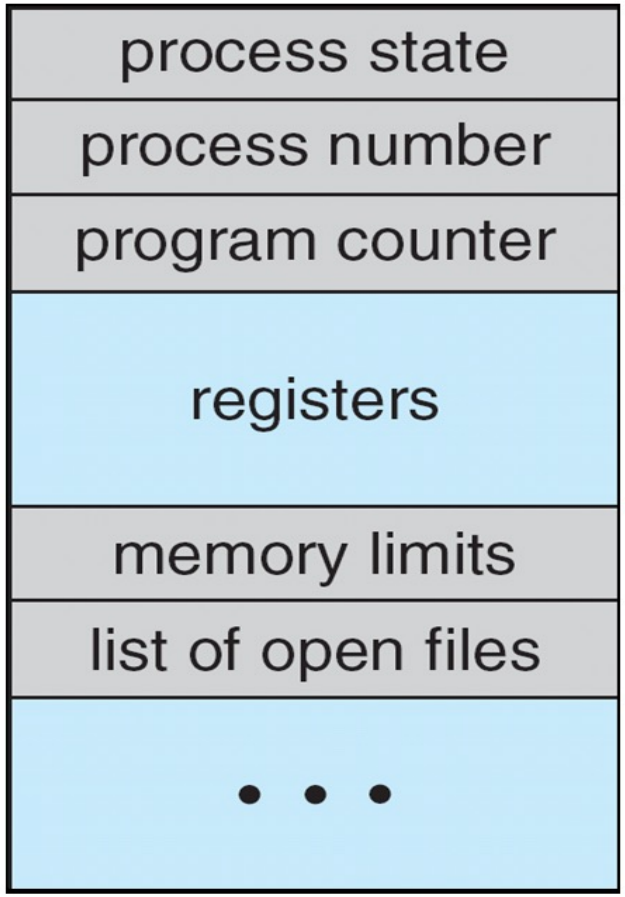

Process Control Block

- Distinction between processes
- Knowledge on processes ready to execute
- Discriminate between processes
- Know the next instruction to execute
- Find the program and data stored in memory
- Keep information about registers
- Keep track about resources, e.g., I/O devices
- Collect information on utilization of the system

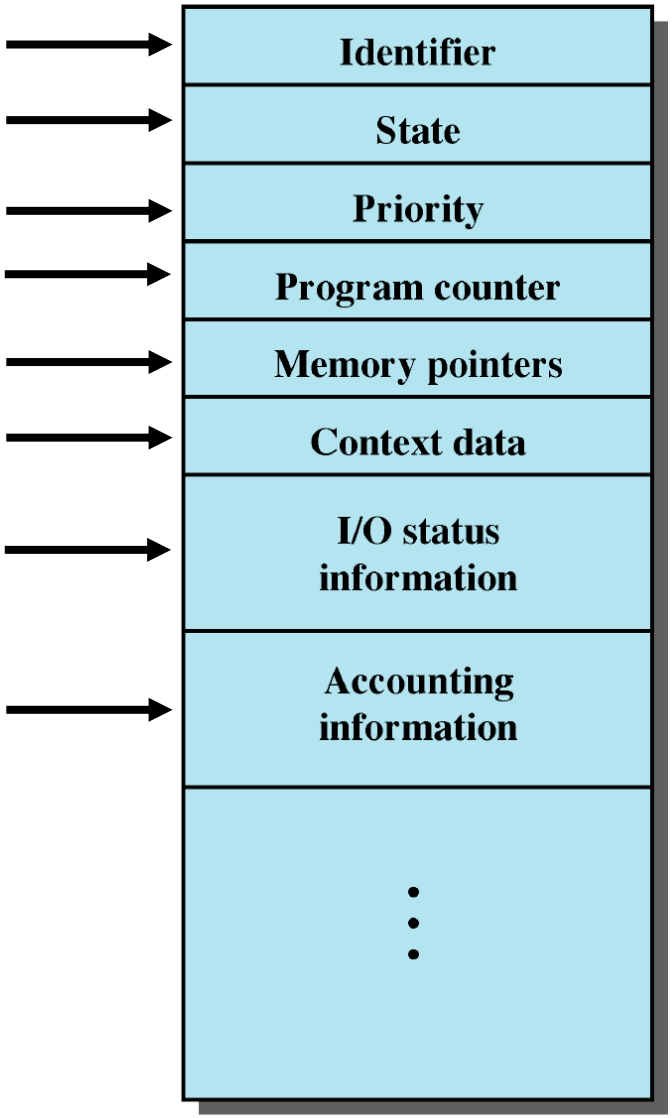

Dispatcher/Scheduler

- OS program that decides which process to run next
- Uses Process Block Control (PBC) information
  - Decision what is the next process to execute

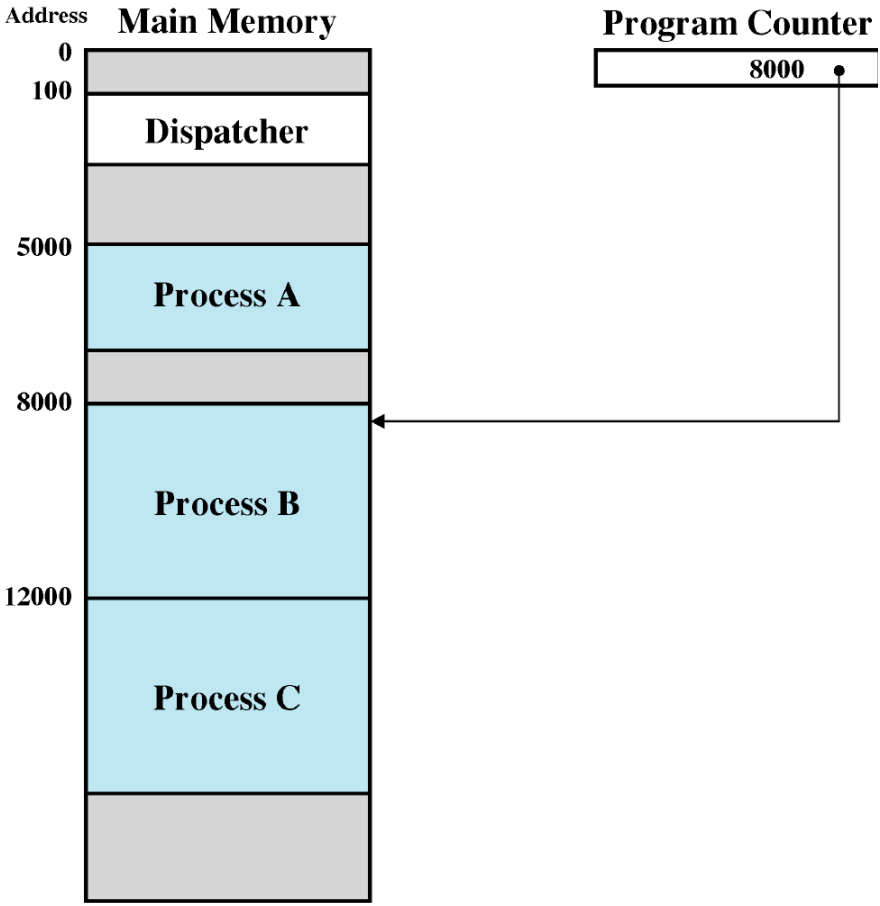

How Does the Dispatcher Gains Control?

- Register interrupt handlers
  - Timeout
  - I/O request

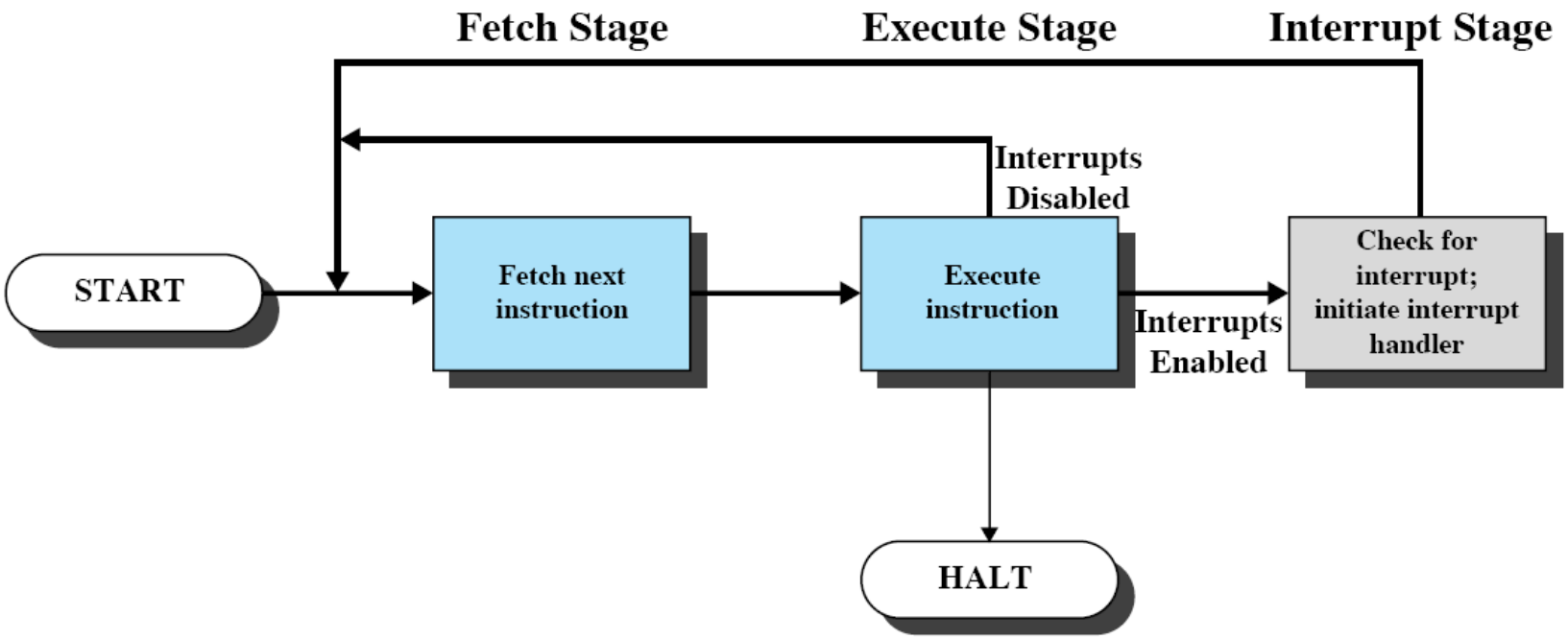

Execution with Timeouts

- On timeout dispatcher gains control
- Decides which process to execute next
- Dispatcher should perform as few instructions as possible

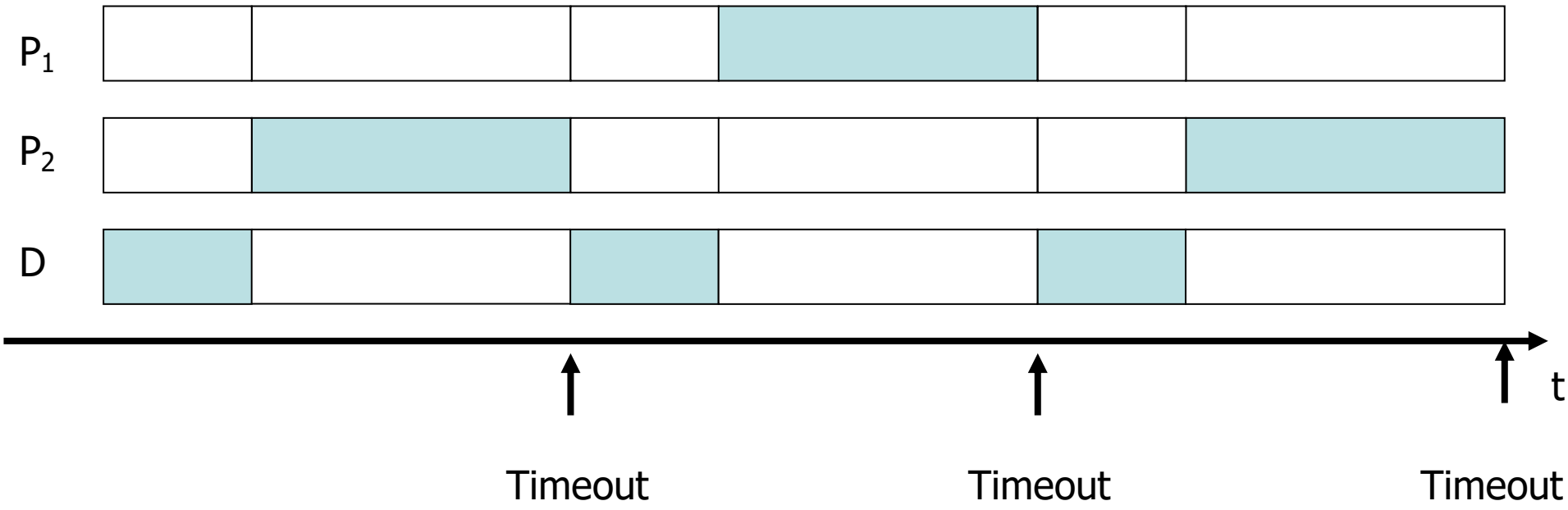

Two-State Process Model

- At any time a process is either being executed by a processor or not

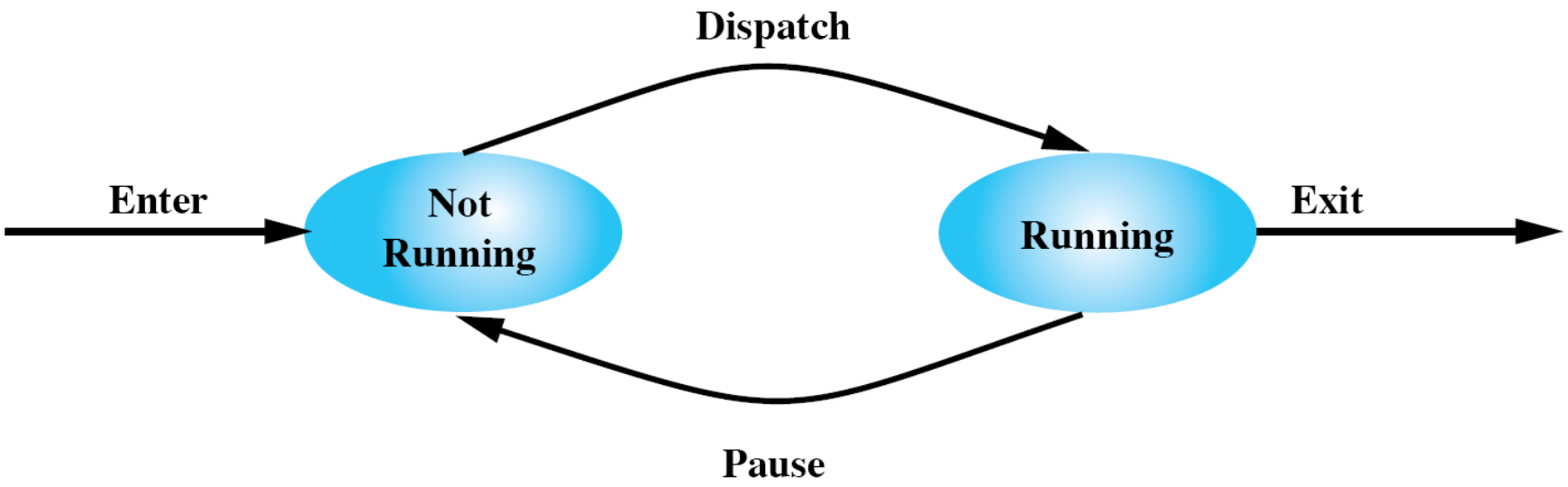

How to Use States for Scheduling?

- Queue of not-running processes
- Queues
  - FIFO, Priority Queue
- Design goal
  - Execute only few operations

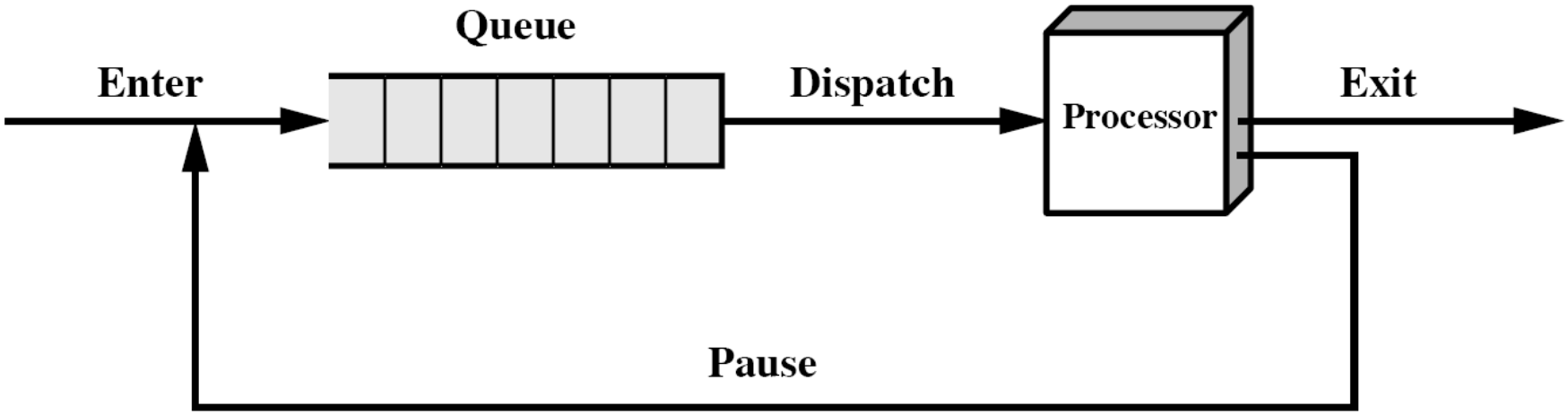

Is Two Process Model Sufficient?

Ready

```
➔ a := 1
  b := a + 1
  c := b + 1
  read a file
  a := b - c
  c := c * b
  b := 0
```

Ready

```
➔ a := 1
  read a file
  b := a + 1
  c := b + 1
  a := b - c
  c := c * b
  b := 0
```

Ready

```
➔ a := 1
  b := a + 1
  c := b + 1
  a := b - c
  c := c * b
  b := 0
  c := 0
```

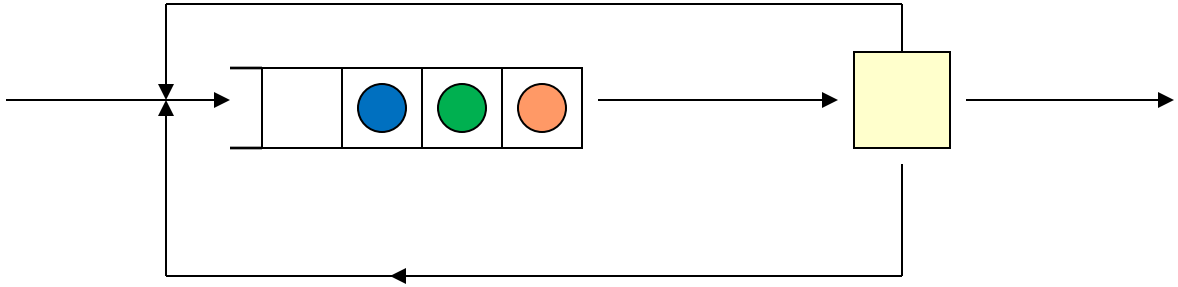

Is Two Process Model Sufficient?

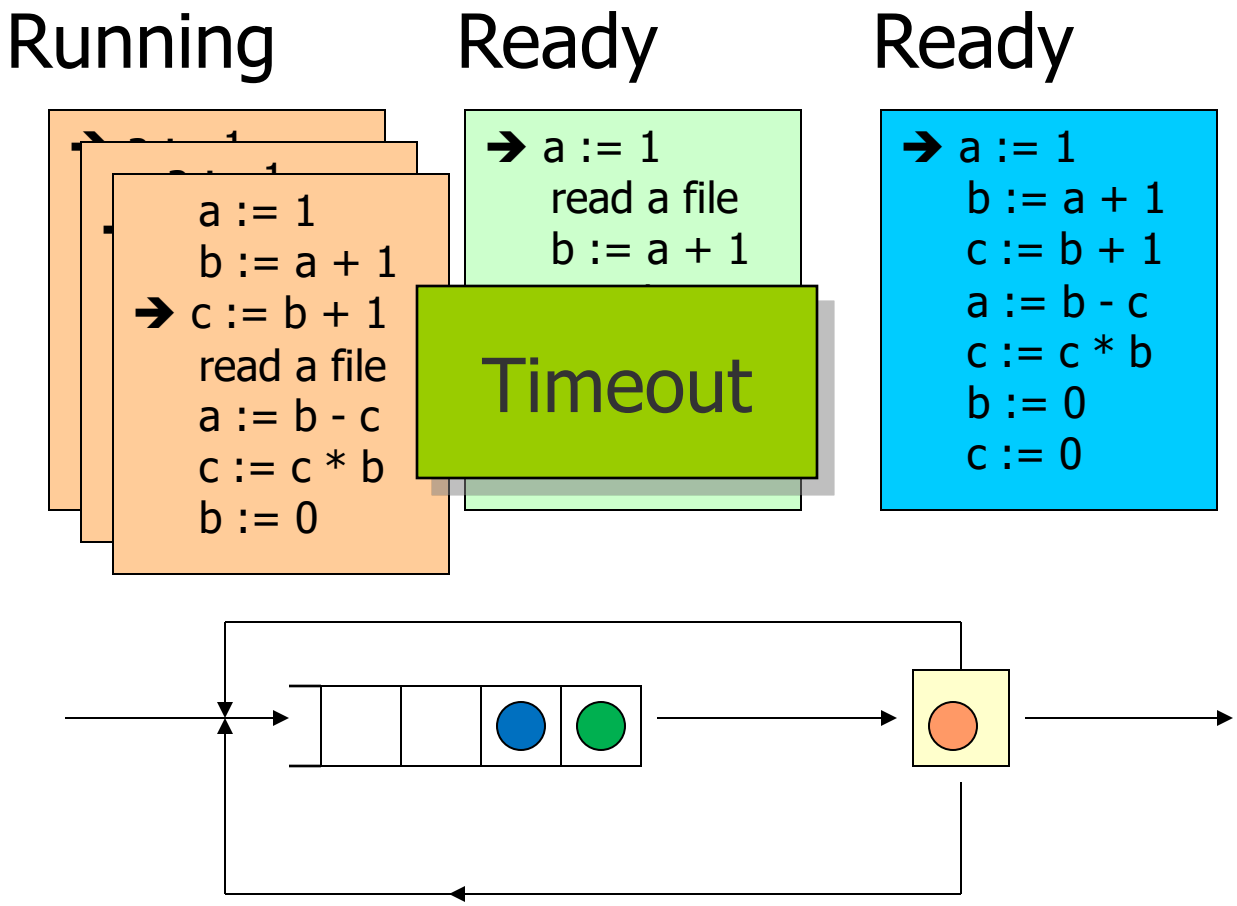

Is Two Process Model Sufficient?

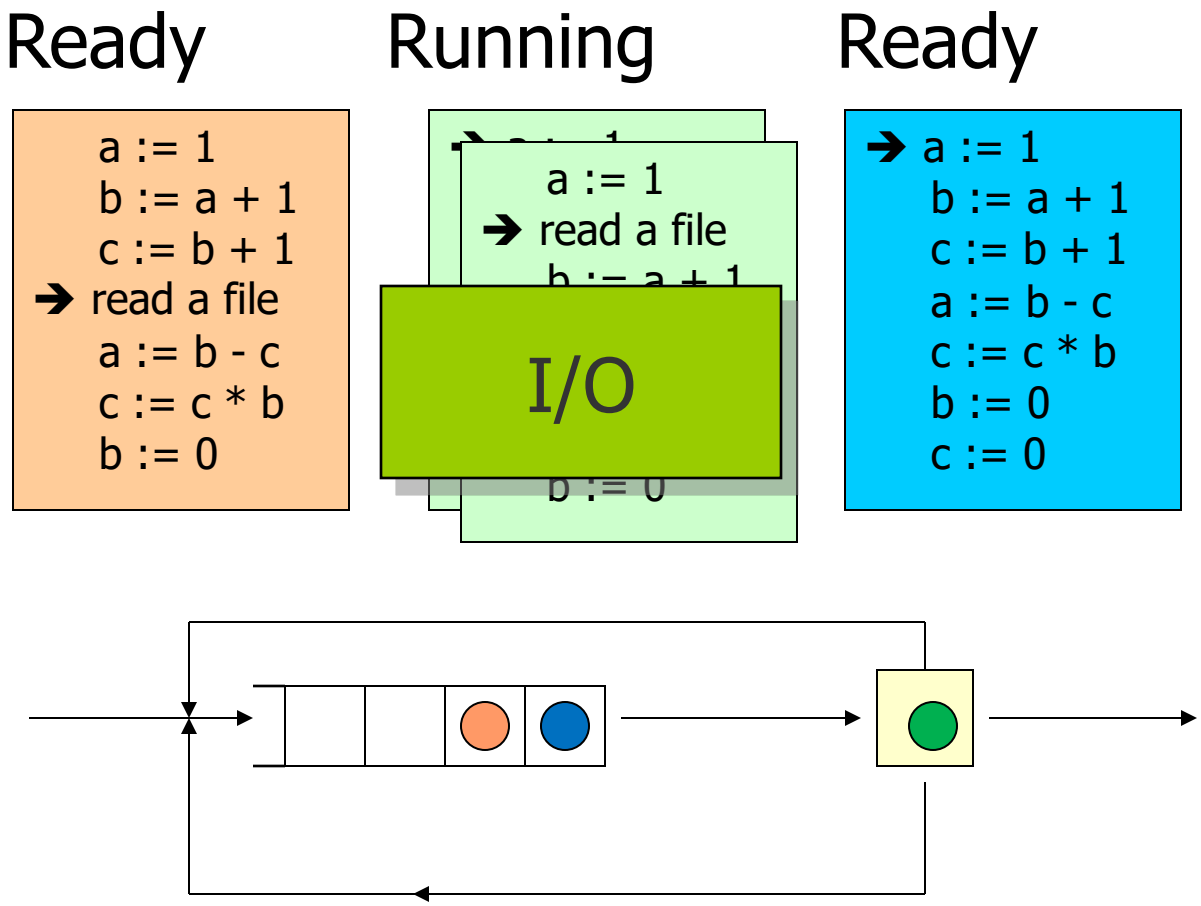

Is Two Process Model Sufficient?

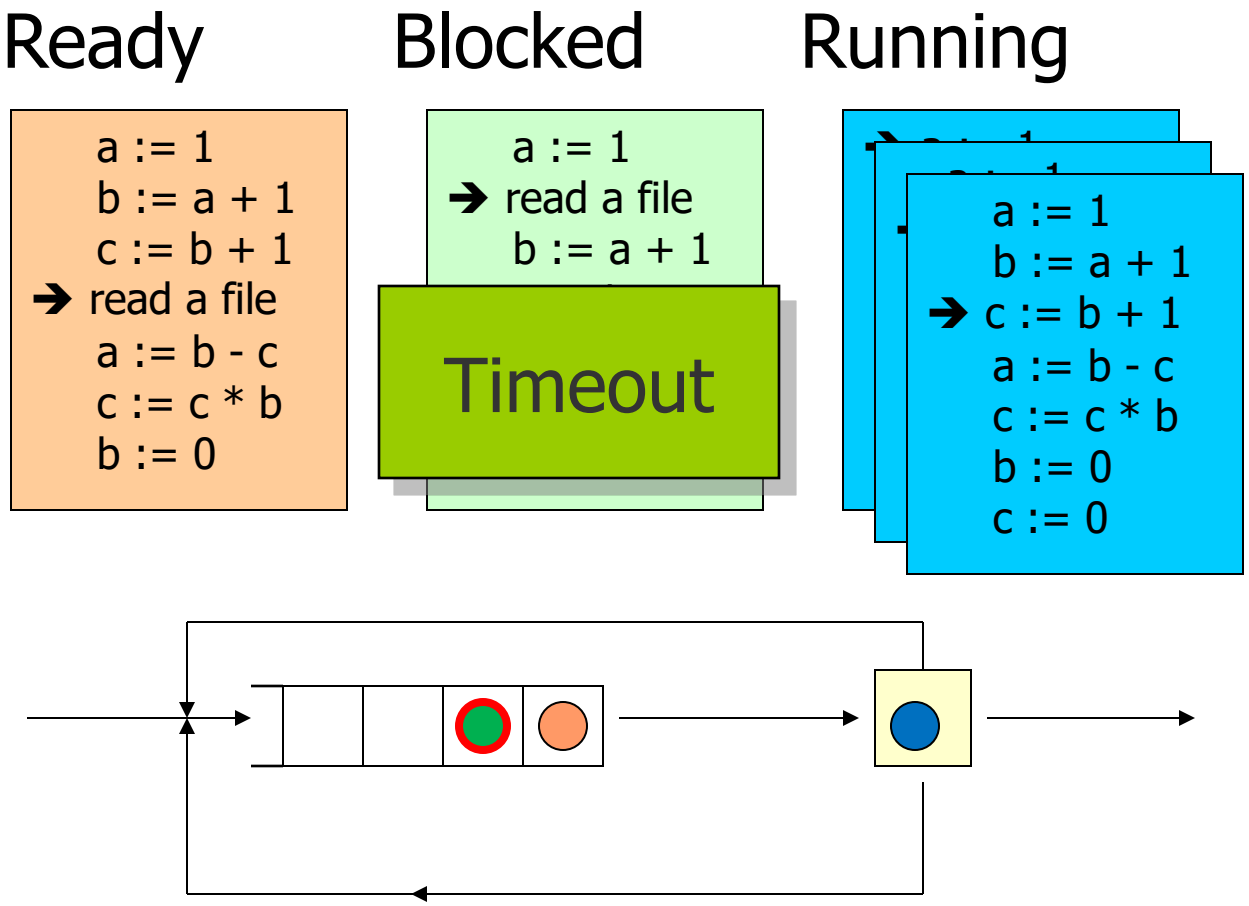

Is Two Process Model Sufficient?

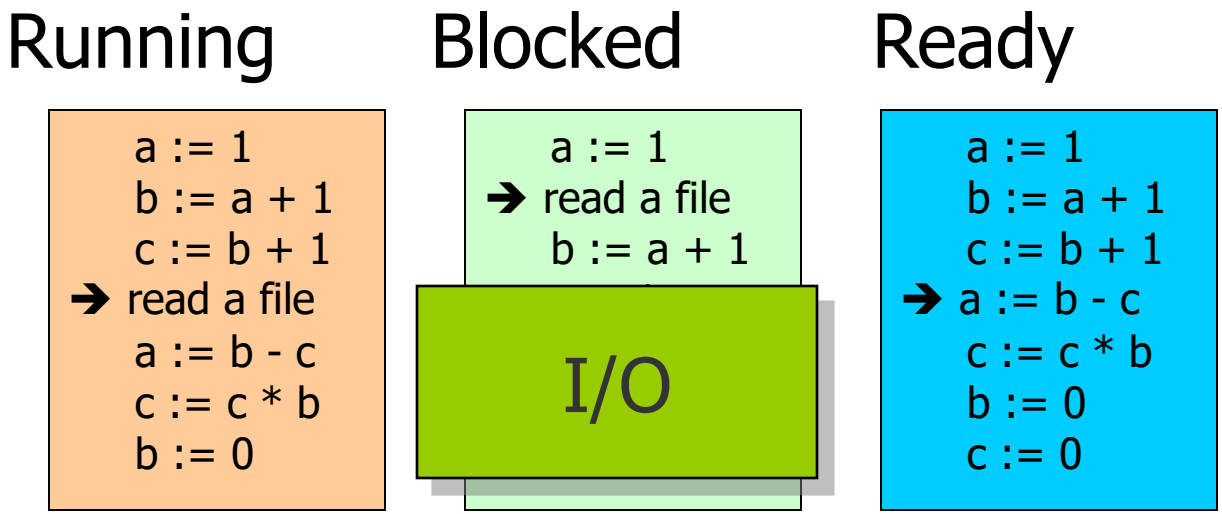

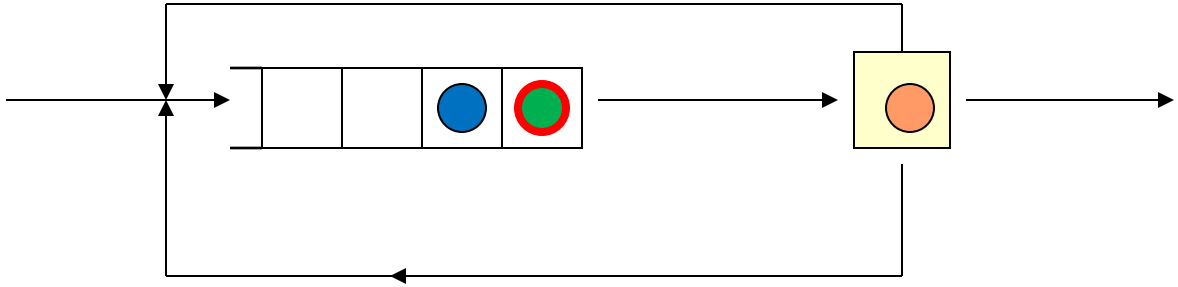

Is Two Process Model Sufficient?

Blocked

```
  a := 1
  b := a + 1
  c := b + 1
➔ read a file
  a := b - c
  c := c * b
  b := 0
```

Blocked

```
  a := 1
➔ read a file
  b := a + 1
  c := b + 1
  a := b - c
  c := c * b
  b := 0
```

The Next Process to Run cannot be simply selected from the front

```
  c := c * b
  b := 0
  c := 0
```

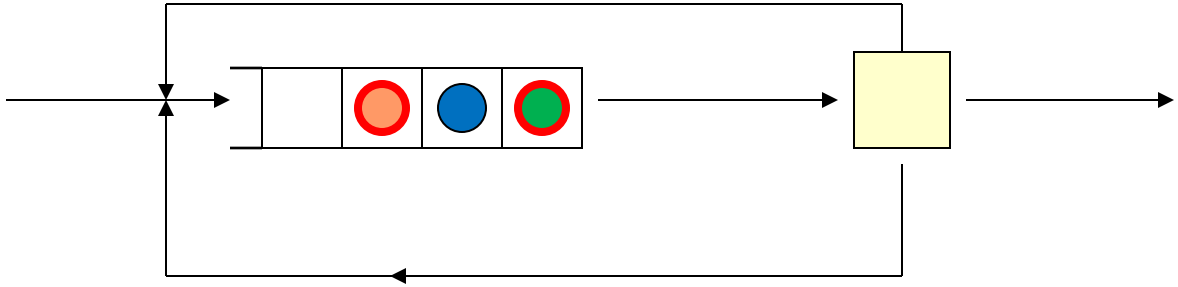

Is Two Process Model Sufficient?

Blocked

a := 1
b := a + 1
c := b + 1

Blocked

a := 1
➔ read a file
b := a + 1

Running

a := 1
b := a + 1

Suppose the Green process finishes I/O

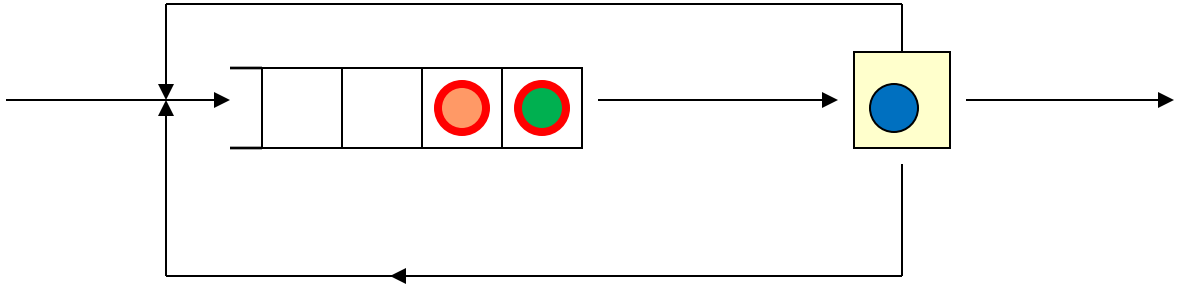

Is Two Process Model Sufficient?

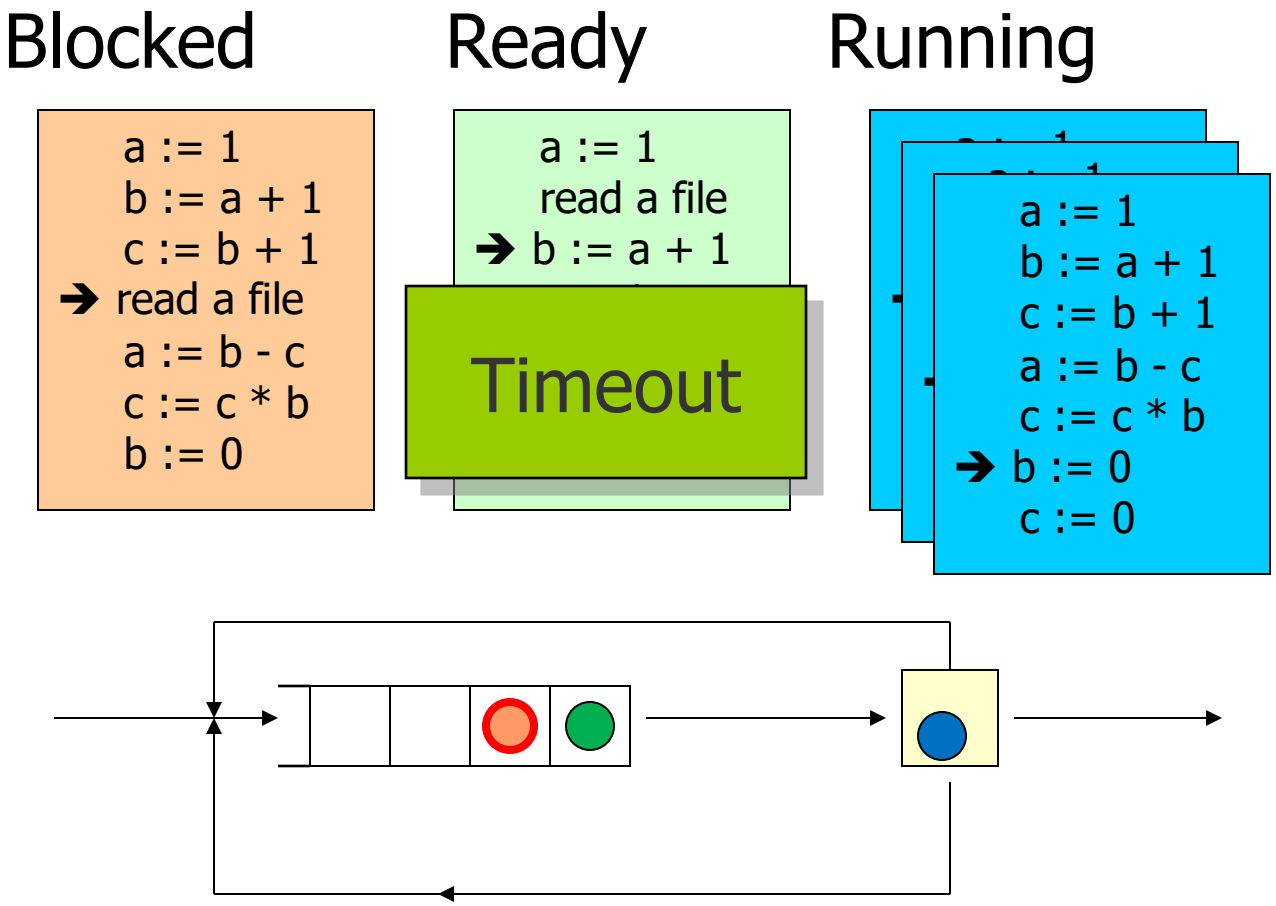

Is Two Process Model Sufficient?

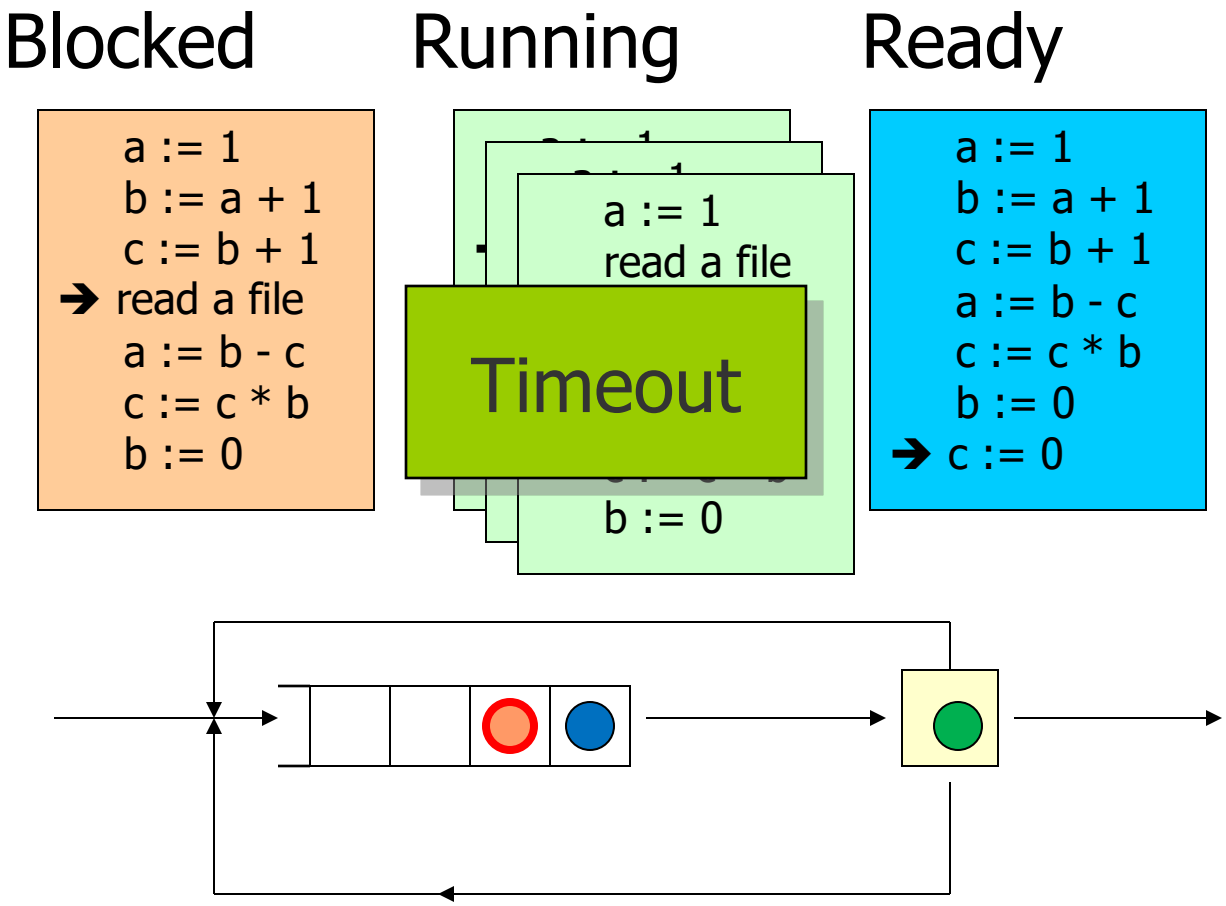

Limitations of Two Process Model

- Timeouts: The process with highest priority will be dispatched to the CPU (… regardless of its capabilities!)

- Wasteful in case of
  - Waiting for I/O operations
  - Waiting for access to a resource
  - In this case dispatcher cannot select the process at the front
  - In worst case dispatcher has to scan the whole queue

- Add more states …
  - Waiting (i.e., blocked), ready

Five State Model

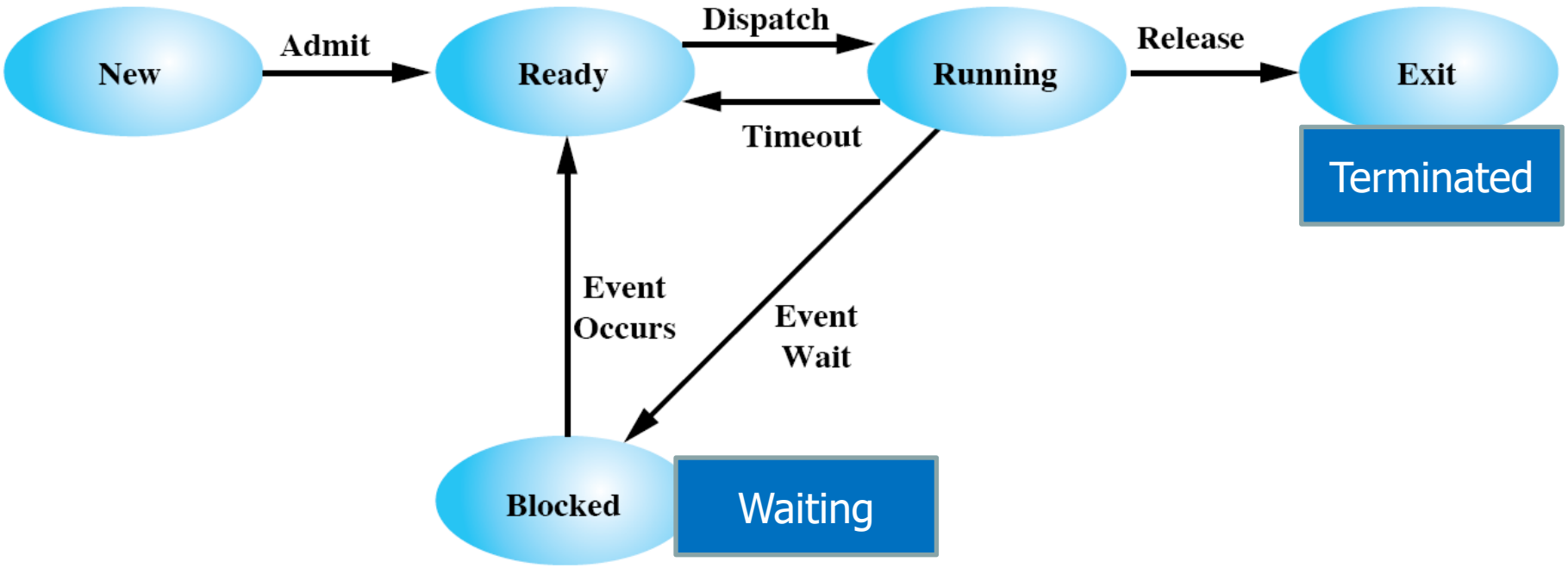

- Admittance to control resource usage
- Processes which need to wait for events can be blocked

How Can the Dispatcher Use the Five States?

- Maintain different queues
  - One for ready processes
  - One/many for blocked processes
- How expensive is it to transfer a process from blocked to ready state?

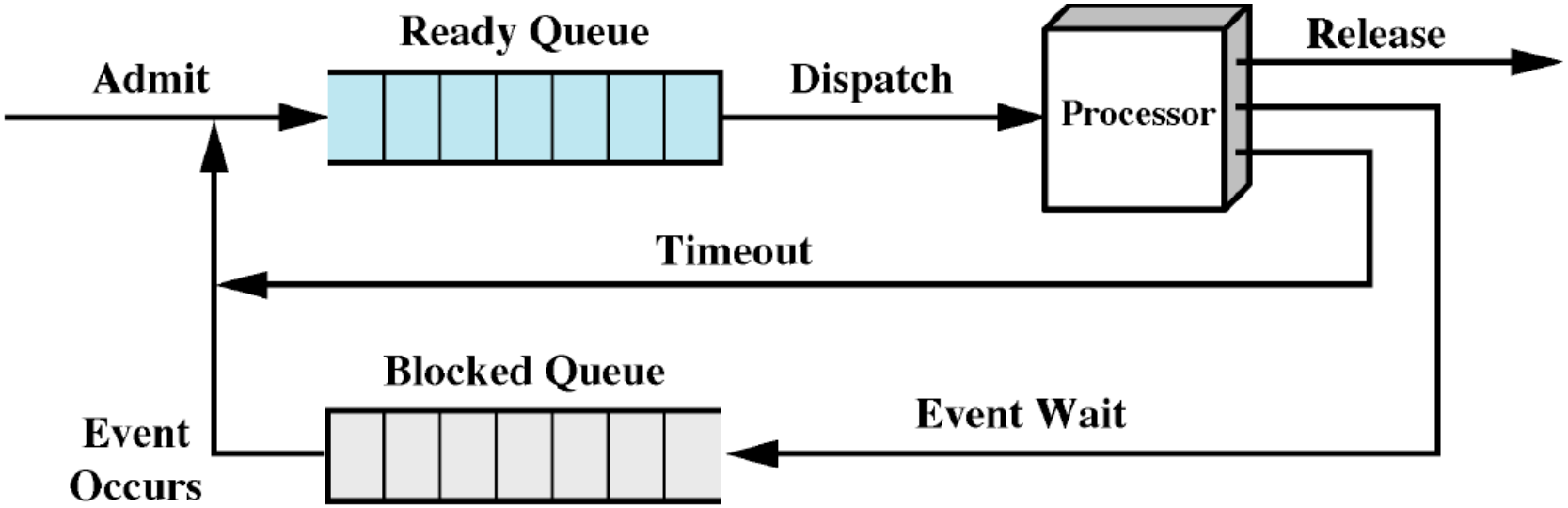

Using Multiple Queues

- Dispatcher can efficiently react to distinct events in the operating system …
- One queue per event
- O(1) operation to transfer process from running to blocked state
- O(1) operation to transfer process from blocked to ready state
- Low dispatch latency

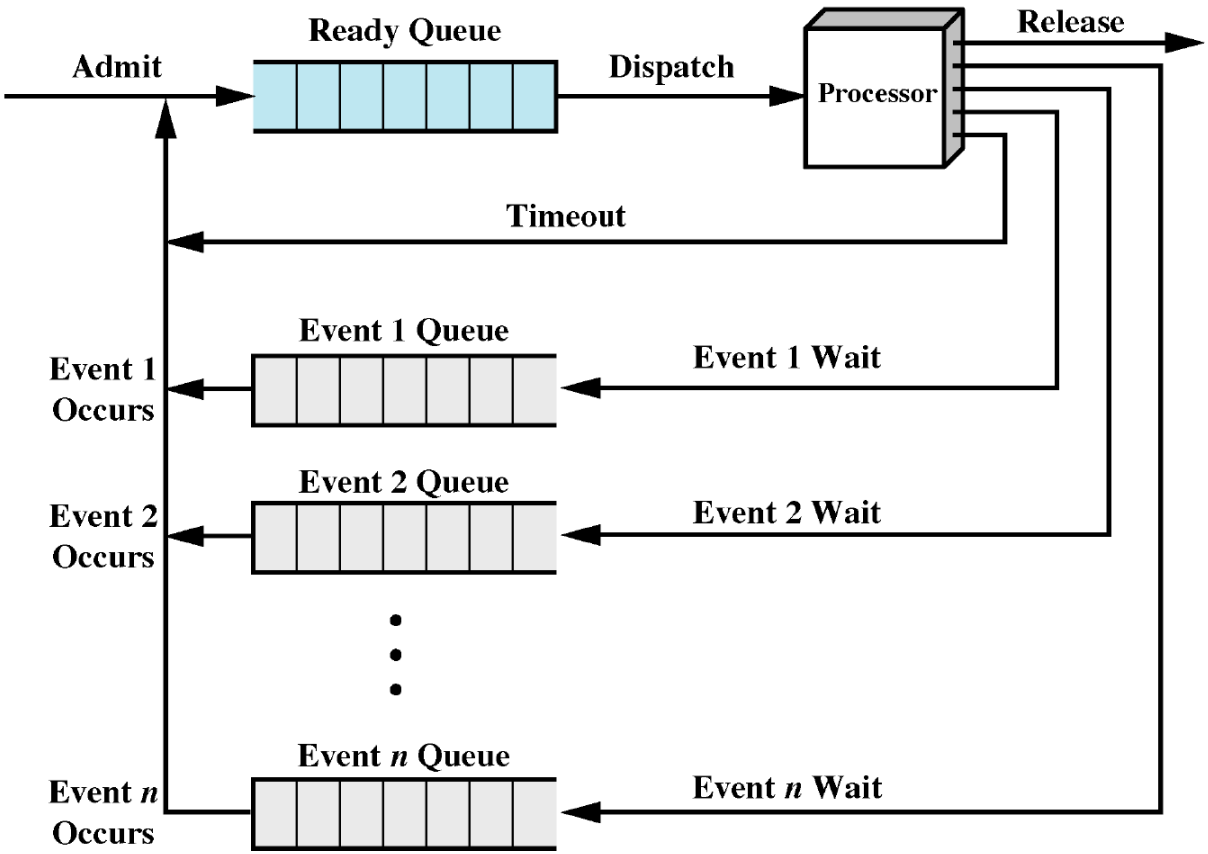

Using Multiple Queues: Ready And I/O Queues

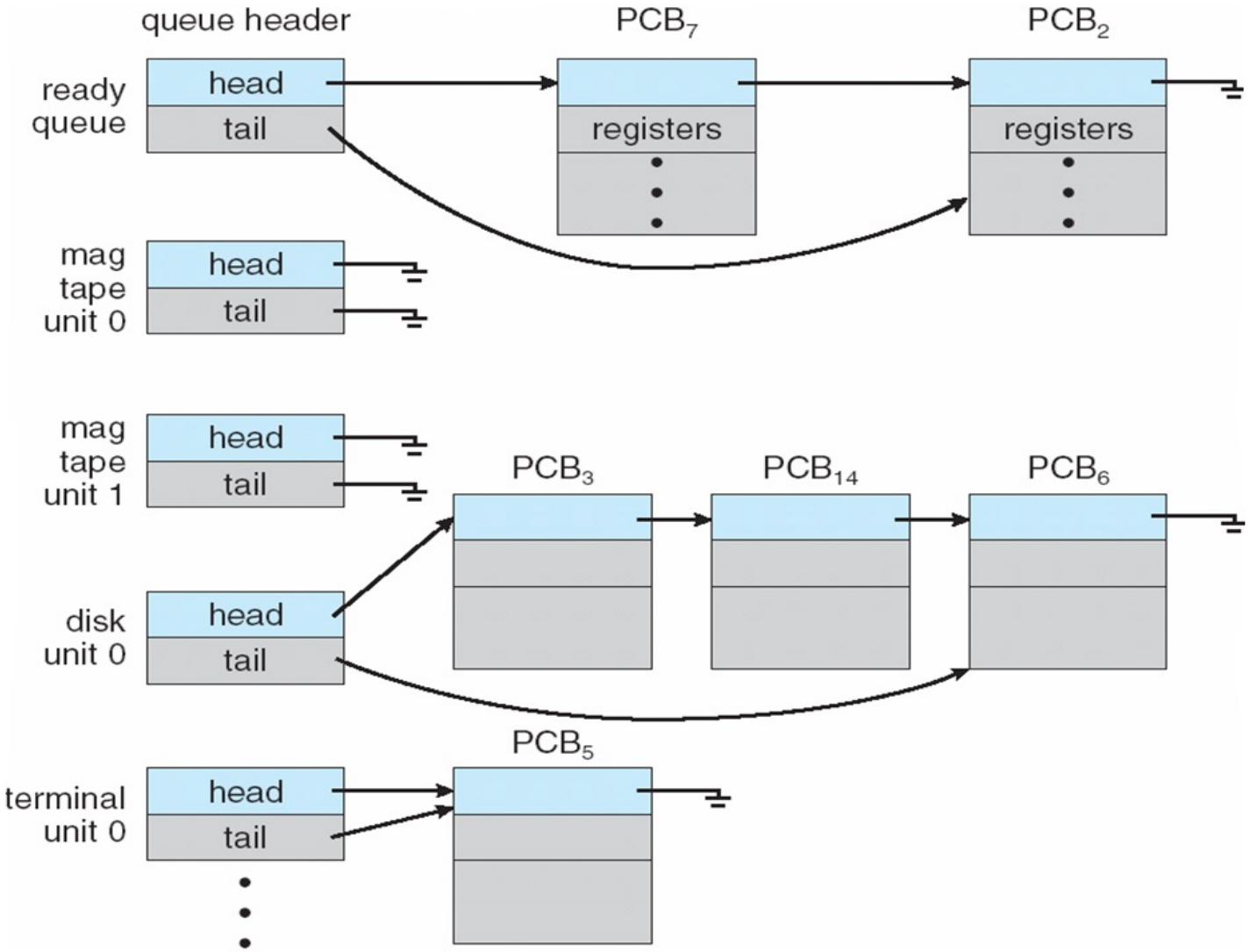

Limitations of the Five State Model

- Available resource usage depends on the number of processes deployed
  - For example, the available memory drops with the number of actively running processes
  - Low hit rate in accessing the memory hierarchy and slow performance

- Idea: Swap some processes to disk
  - For example, free up more memory and achieve higher hit rate for other processes

- Process is in suspend state when swapped to disk
  - Nothing of the process image resides in main memory!

Suspended Processes

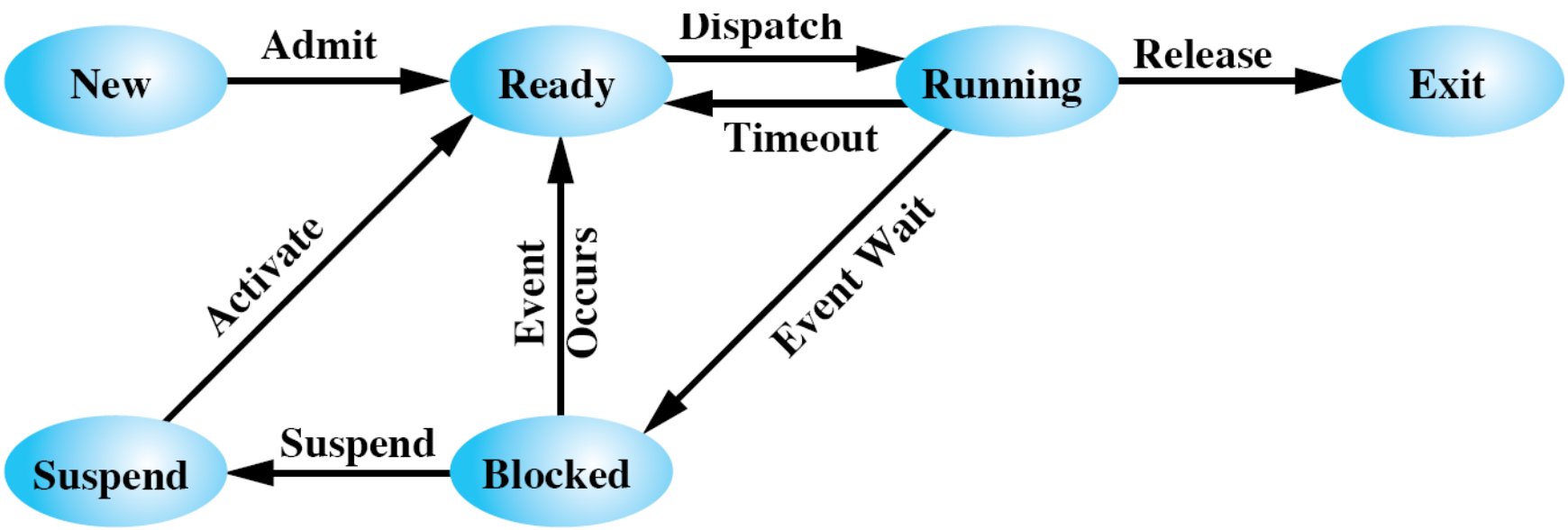

Two Suspend States

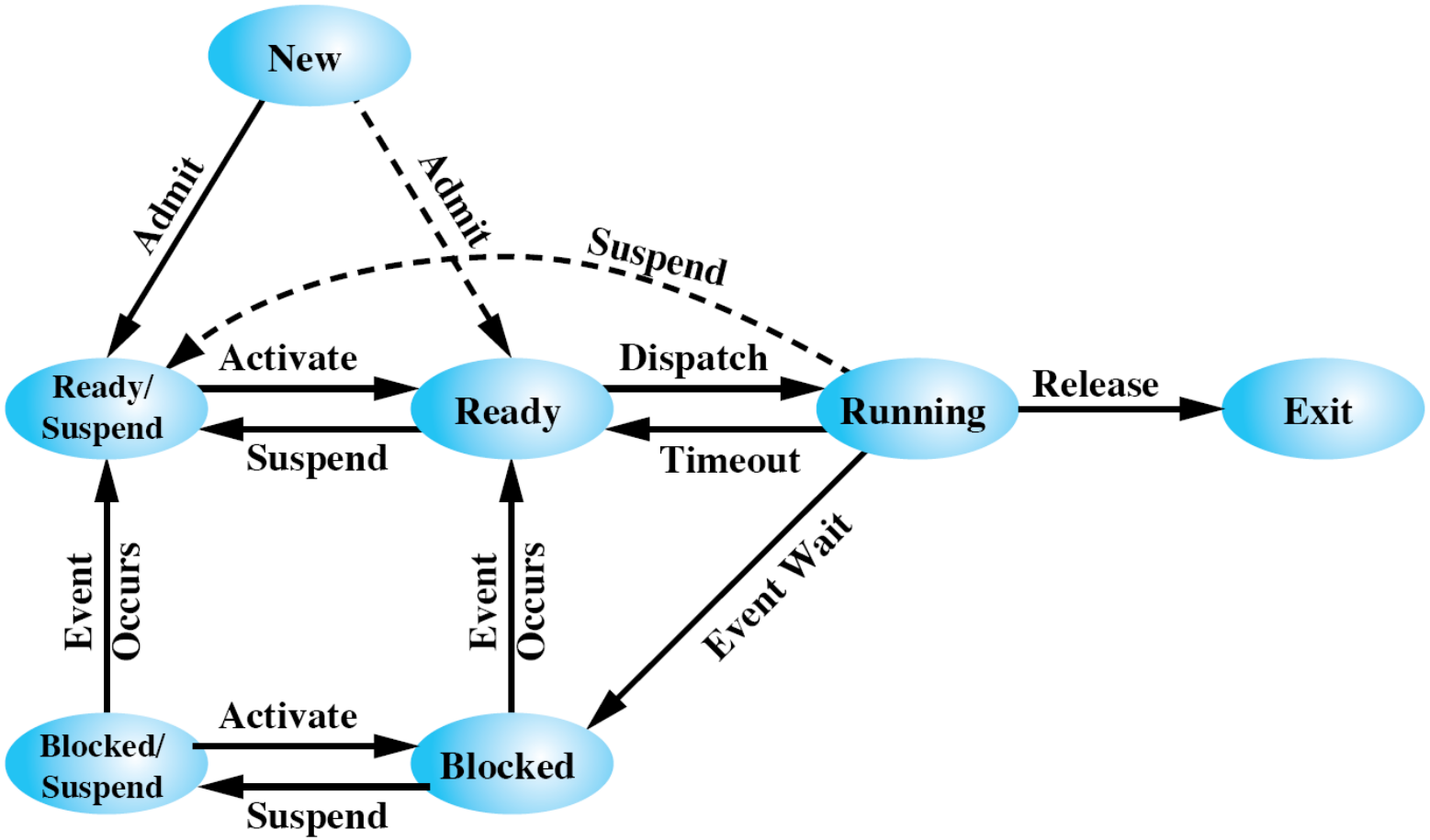

Why is It Possible to Gain From Suspension?

Swapping involves I/O!

Does this increase the problem?

But

- Disk I/O usually faster than other types of I/O
  - Printer, tape, …
- Can swap processes which are suspected to cause a problem
  - Deadlock prevention
- Users may ask to suspend the execution of processes
- Periodic tasks with long period
  - Reactivate process when next time interval is ready
- Parent process
  - Suspend execution of a child: examine, modify, coordinate

Unix V Process State Transition

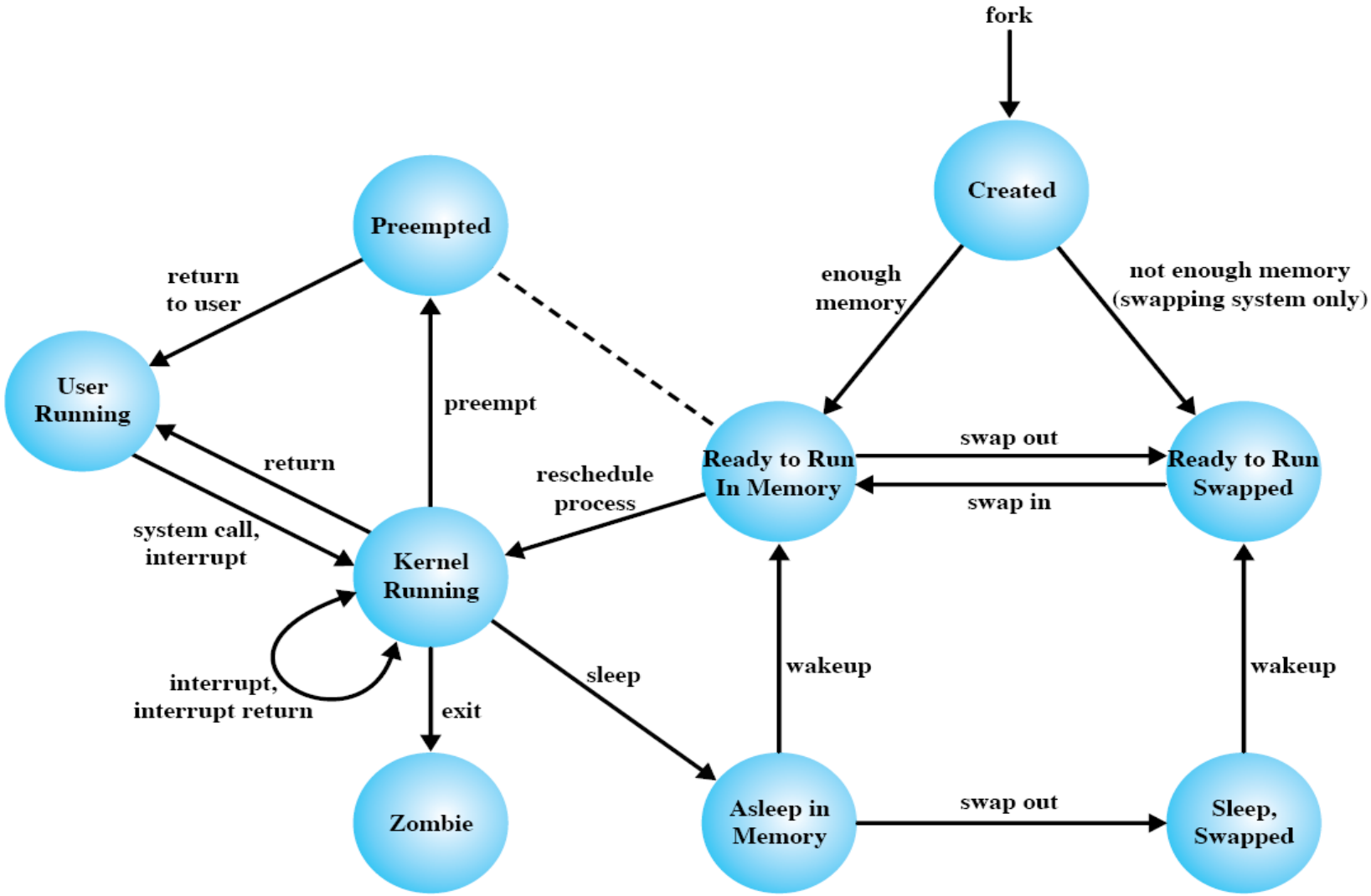

Context Switching

- Context of a process represented in the PCB
- When CPU switches to another process, OS must
  - Save context of processor including program counter and other registers (in PCB)
  - Move PCB to appropriate queue (ready, blocked, …)
  - Select another process for execution
  - Update the PCB of the process selected
  - Update memory-management data structures
  - Restore context (in processor) of the selected process
- Context switch time is overhead
  - The system does no useful work while switching
  - Time is also dependent on hardware support
    - For example, some hardware provides multiple sets of registers per CPU

Context Switching

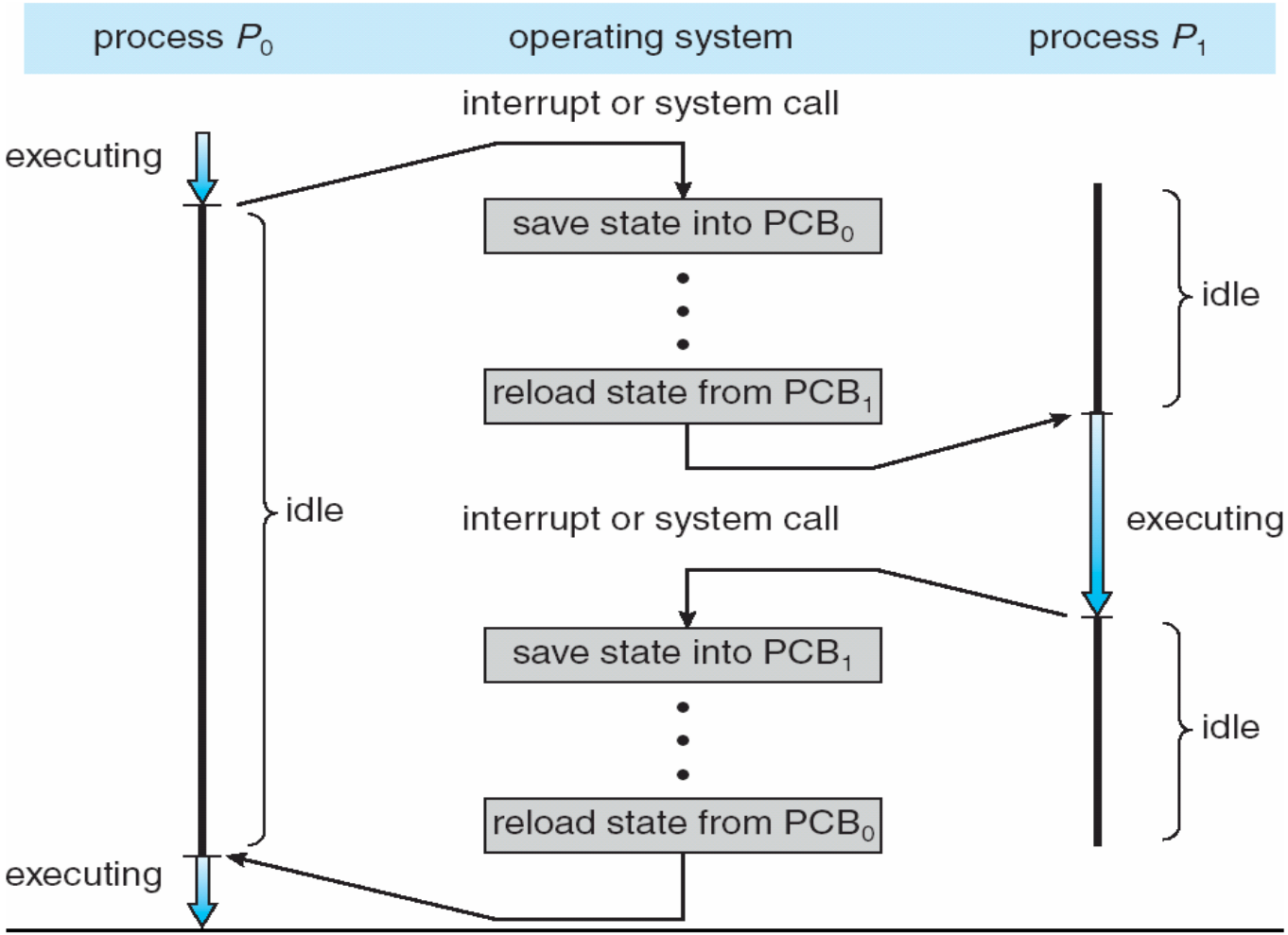

Process Creation

Process Creation

1. Assign a unique identifier (pid) to the new process
2. Allocate space for the process
3. Initialize PCB

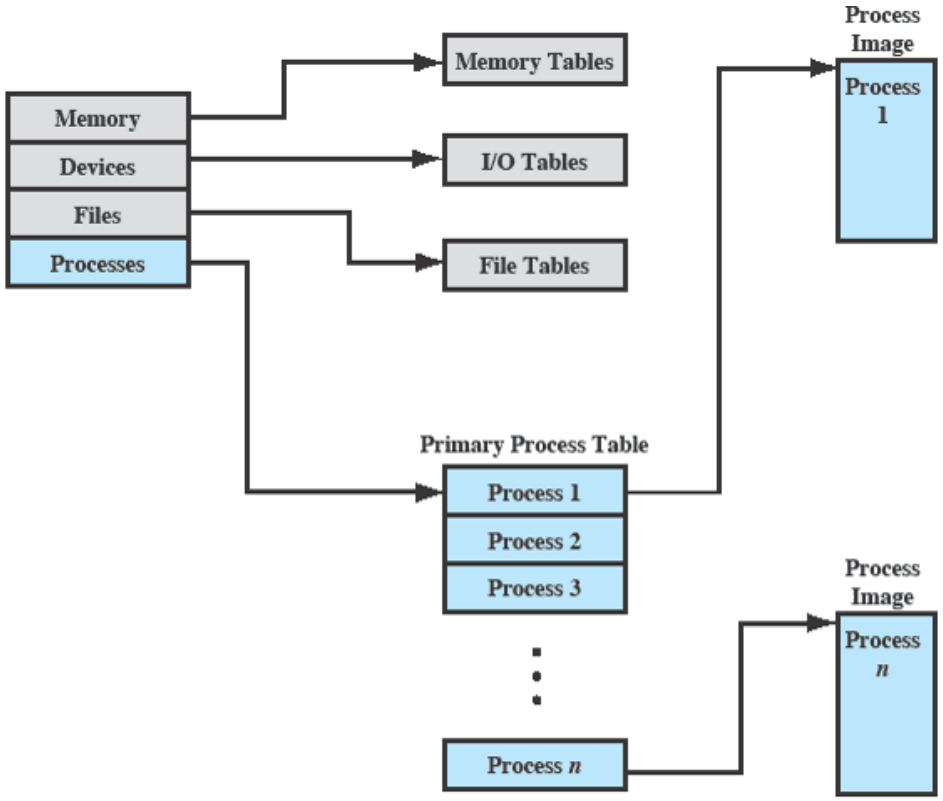

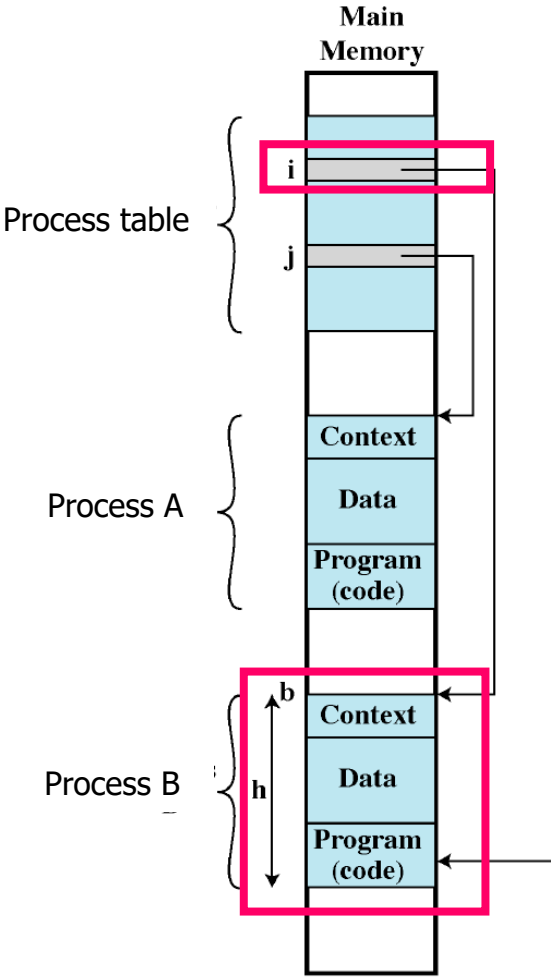

Process Creation

1. Assign a unique identifier (pid) to the new process
2. Allocate space for the process
3. Initialize PCB
4. Setup appropriate linkage
   - E.g., add to ready or ready suspend queue
5. Create or expand other data structures

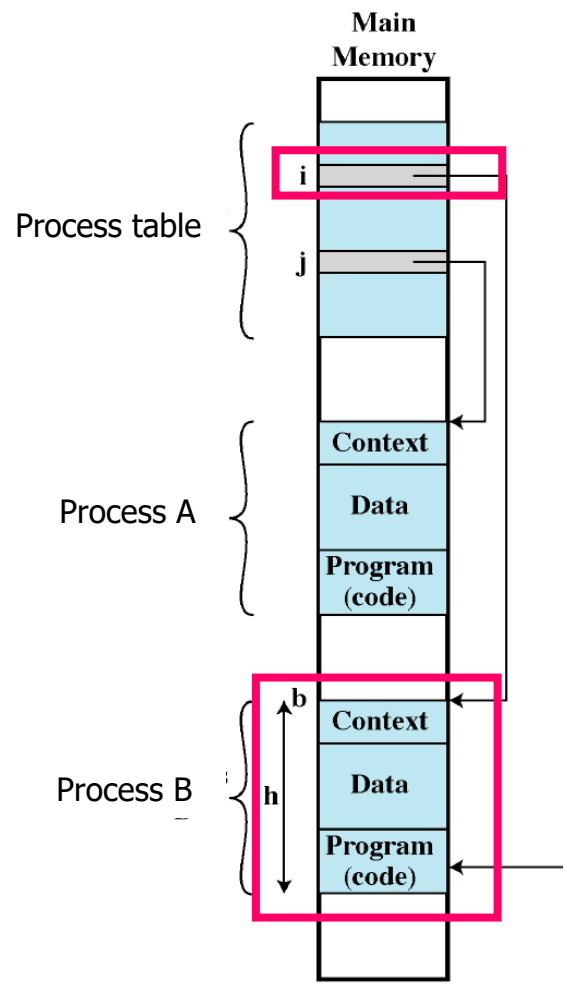

Process Creation

- Traditionally, the OS created all processes
- But it can be useful to let a running process create another
- This action is called process spawning
  - Parent Process is the original, creating, process
  - Child Process is the new process

Process Creation

- Parent process create child processes, which, in turn create other processes, forming a tree of processes
  - Process identified and managed via a process identifier (pid)

- Resource sharing
  - Parent and children share all resources
  - Children share subset of parent's resources
  - Parent and child share no resources
- Execution
  - Parent and children execute concurrently
  - Parent waits until children terminate
- Address space
  - Child duplicate of parent
  - Child has a program loaded into it

Process Tree on Solaris

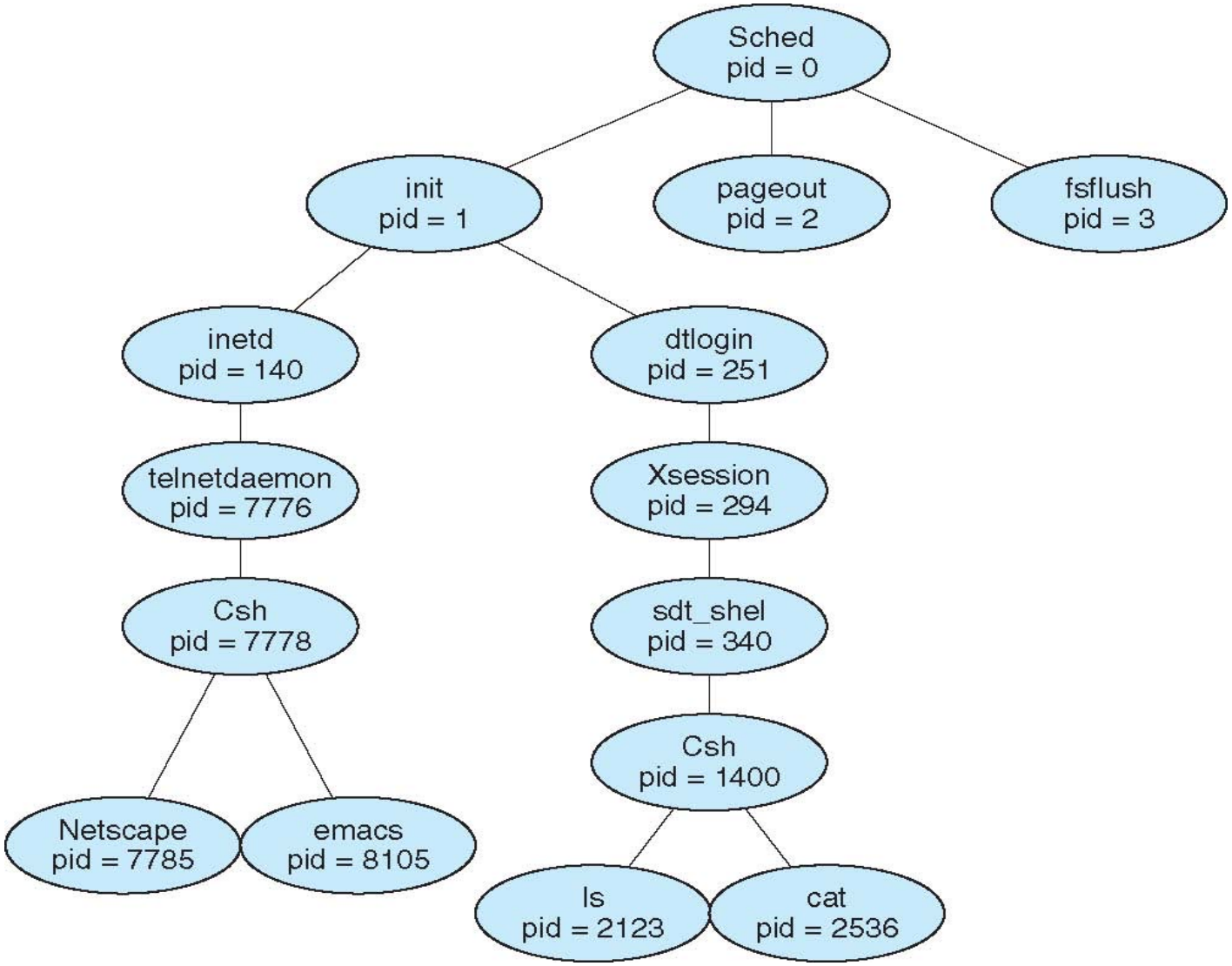

Process Creation in Linux

- **fork** system call creates new process

```
int pid;
int status = 0;

pid = fork();
if (pid>0) {
      /* parent */
      ……
      pid = wait(&status);
} else {
      /* child */
      ……
      exit(status);
}
```

fork creates an exact copy of the parent process

process ID to the parent

child pid and status.

wait variants allow wait on a specific child, or notification

Child process passes status back to parent on **exit**, to report success/failure

`fork()` System Call

- Child process inherits
  - Stack
  - Memory
  - Environment
  - Open file descriptors
  - Current working directory
  - Resource limits
  - Root directory

- Child process does not inherits
  - Process ID and parent process ID
  - Timers and pending signals
  - Resource utilization and CPU times (initialized to zero)
  - Memory and file locks

Zombie (or Defunct) Process

- A process that has completed execution but still has an entry in the process table
- Process table entry is needed to allow the parent process to read the child's exit status
  - Parent can read the status by executing the `wait()` system call
- No memory allocated to zombie process except for the process table entry
  - On exit, all of the memory and resources are deallocated
  - However, process table can only have limited number of entries

Orphan Process

- An orphan process is a process that is still executing, but whose parent has terminated
  - If the parent terminates without calling `wait()`, the child is adopted by `init`

- Orphan processes do not become zombie processes
  - `init` periodically executes the `wait()` system call to avoid zombie processes

`exec()` System Call

- Enable child process to run other program
- Replaces process's memory space with a new program
  - Loads binary file into memory and starts its execution
- Cannot create new process
  - Typically used after `fork()`

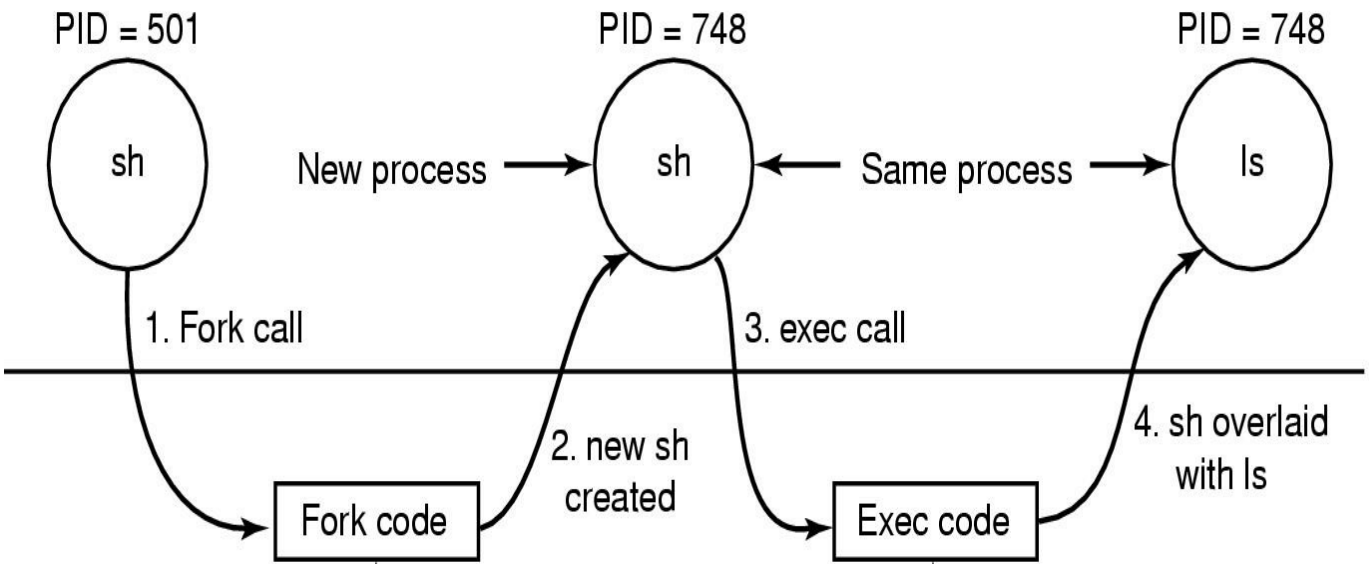

Steps in executing the command **ls** issued to the shell

exec() System Call Example

```
int main(int argc, char *argv[])
{
   pid_t cpid;
   cpid = fork();
   if (cpid == -1){
      perror("fork");
      exit(EXIT_FAILURE);
   }
   if (cpid == 0) {
      /* Child code */
      execlp ("/bin/ls", "ls", NULL);
      /* Why no exit statement*/
   }
   else {
      /* parent code */
      wait(NULL);
      printf("child finished");
      exit(EXIT_SUCCESS);
  }
}
```

`exec()` System Call Example

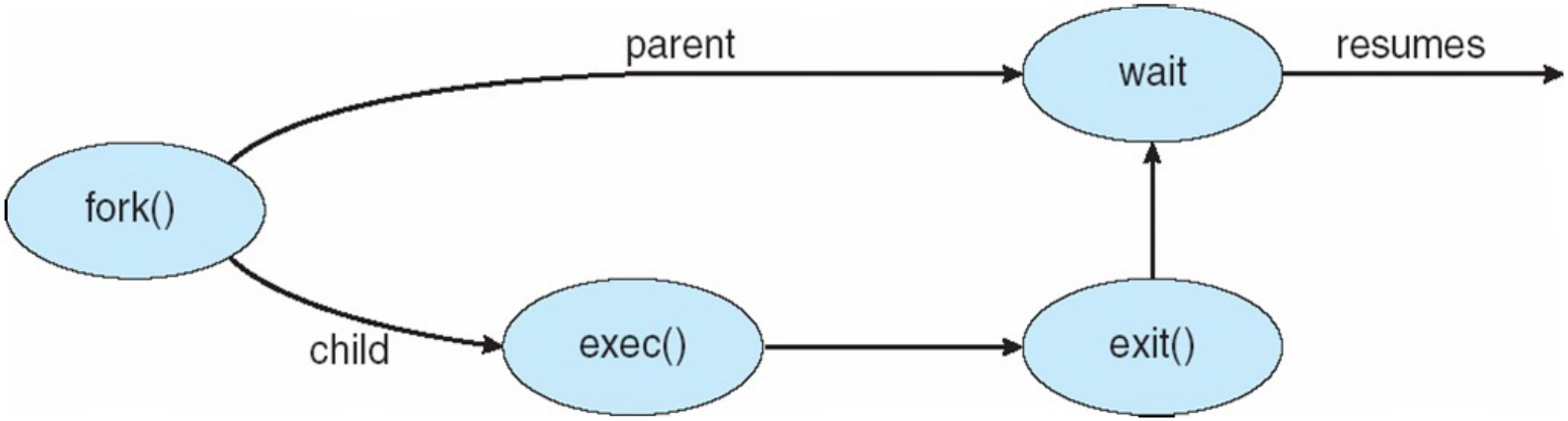

Interprocess Communication

Interprocess Communication

- A process has access to the memory which constitutes its own address space
- So far, we have discussed communication mechanisms only during process creation/termination
- When a child process is created, the only way to communicate between a parent and a child process is:
  - The parent receives the exit status of the child
- Processes may need to communicate during their life time

Interprocess Communication

- Processes within a system may be independent or cooperating
  - Cooperating process can affect or be affected by other processes
- Reasons for processes corporation
  - Information sharing
  - Computation speedup
  - Modularity
  - Convenience
- Cooperating processes need interprocess communication (IPC)
- Two fundamental models of IPC
  - Shared memory
  - Message passing

Communication Models

Shared memory

- Need to establish a region of shared memory
- Usually resides in the address space of a process
- OS system calls are only needed to setup the memory
- Basic operations: `read/write`

Message passing

- Send messages between processes
- Requires system calls to the OS for every message
- Often easier to realize for networked process communication
- Basic operations: `send/receive`

Communication Models

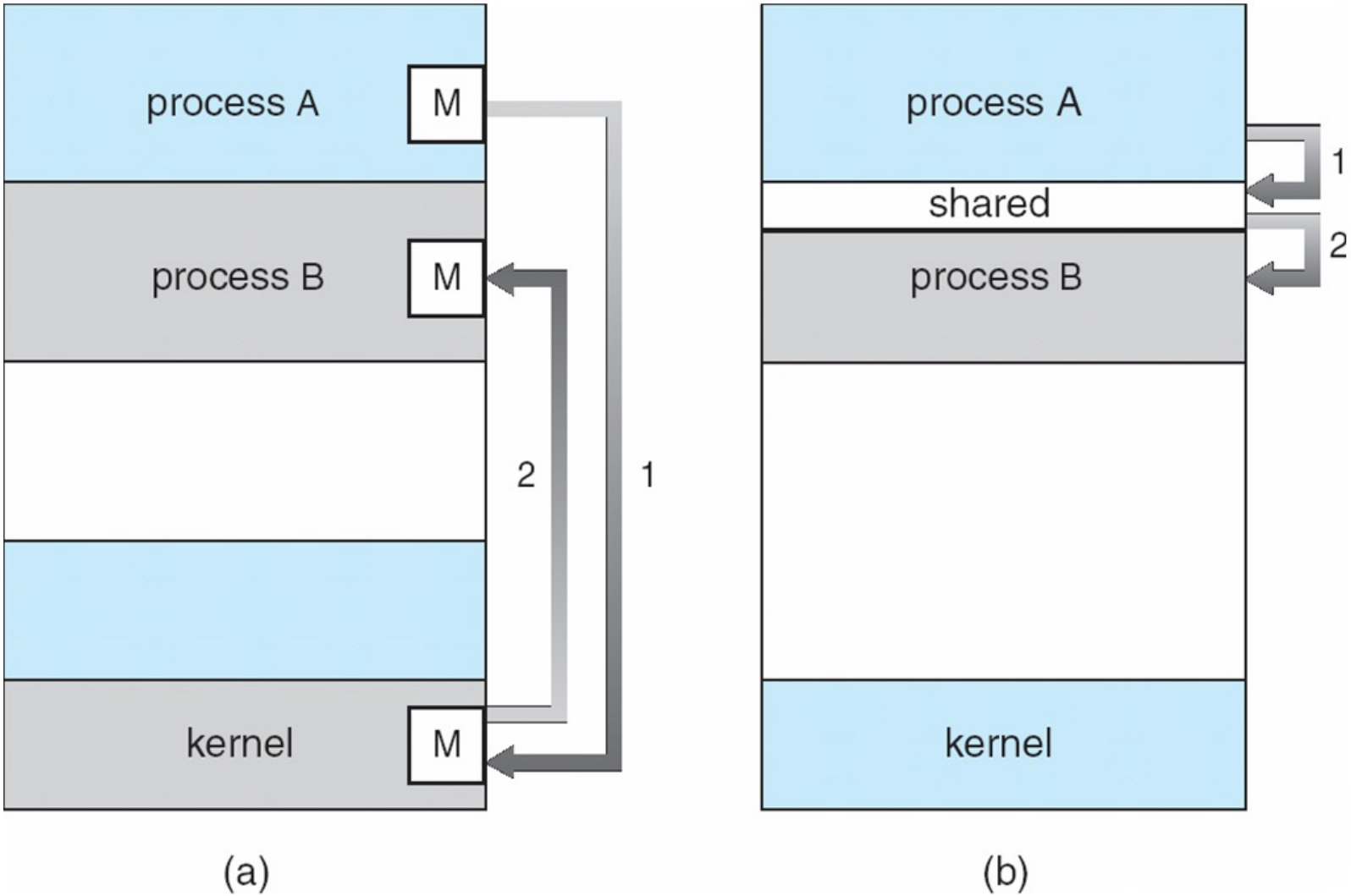

Shared Memory

- Usually resides in the address space of the process creating shared memory

- Require processes to coordinate their processing
  - Results of read/write not guaranteed to be deterministic
  - Concurrent writes to the same address
  - Result depends on the order of operations

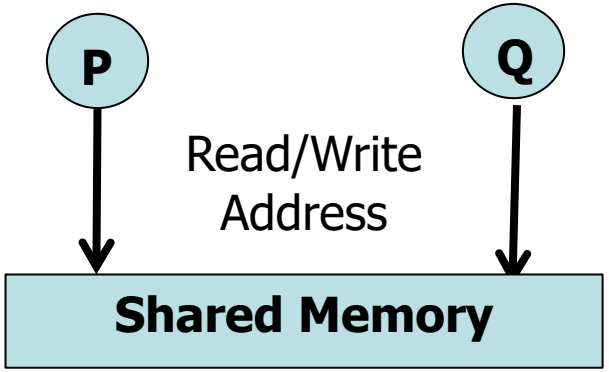

Shared Memory – POSIX API

- Process first creates shared memory segment
  - `id = shmget(IPC_PRIVATE, size, S_IRUSR | S_IWUSR);`
- Process wanting access to that shared memory must attach to it
  - `shared_memory = (char *) shmat(id, NULL, 0);`
- Now the process could write to the shared memory
  - `sprintf(shared_memory, "Writing to shared memory");`
- When done a process can detach the shared memory from its address space
  - `shmdt(shared_memory);`

Message Passing

- No sharing of resources between processes needed
- Basic operations
  - `send({destination}, message)`: send a message
  - `receive({source}, message)`: receive a message
- If P and Q wish to communicate, they need to:
  - Establish a communication link between them
  - Exchange messages via send/receive
- Implementation of communication link
  - Physical (e.g., shared memory, hardware bus)
  - Logical (e.g., logical properties)

Implementation Questions

- How are links established?
- Can a link be associated with more than two processes?
- How many links can there be between every pair of communicating processes?
- What is the capacity of a link?
- Is the size of a message that the link can accommodate fixed or variable?
- Is a link unidirectional or bi-directional?

Direct Communication

Direct symmetric communication

- Each process that wants to communicate must name the recipient
  - `send(P, message)`
    - Send a message to process P
  - `receive(Q, message)`
    - Receive a message from process Q
- Communication link established automatically
- Link associated exactly between two processes

Direct asymmetric communication

- Use instead
  - `send(P, message)`
    - Send a message to process P
  - `receive(message)`
    - Receive message from arbitrary process

Indirect Communication

- Problem of Direct Addressing
  - Changing a process identifier may impact all other process definitions
  - Limited modularity

- Indirect addressing uses mailbox or port concept
  - Mailbox: Shared by multiple receiver
  - Port: Receiver Specific, e.g., WebServer uses port 80
  - `send(A, message)`
    - Send a message to mailbox/port named A
  - `receive(A, message)`
    - Receive a message from mailbox A
  - Link is only established if both members share a mailbox
  - A link may be associated with more than 2 processes
  - Each pair of processes may share several communication links

One-to-One

- Private communication link between two processes

Many-to-One

- Client/server interactions

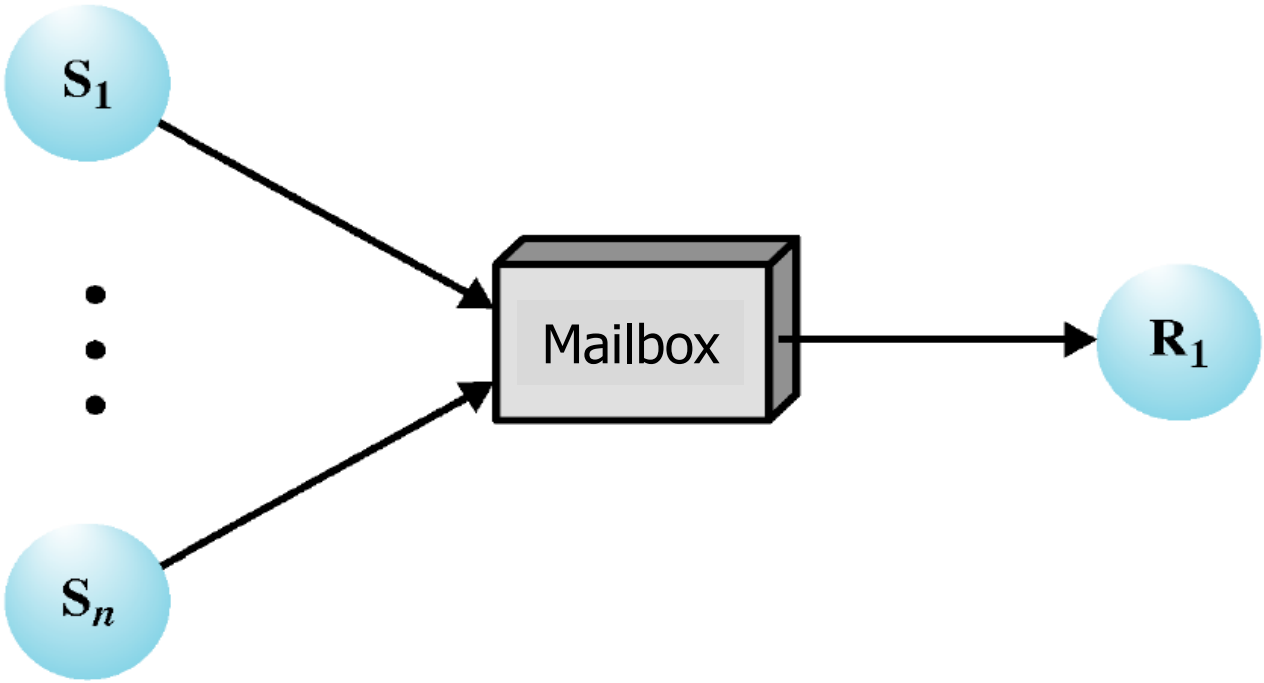

One-to-Many

- Multicast information from a source to a set of receivers

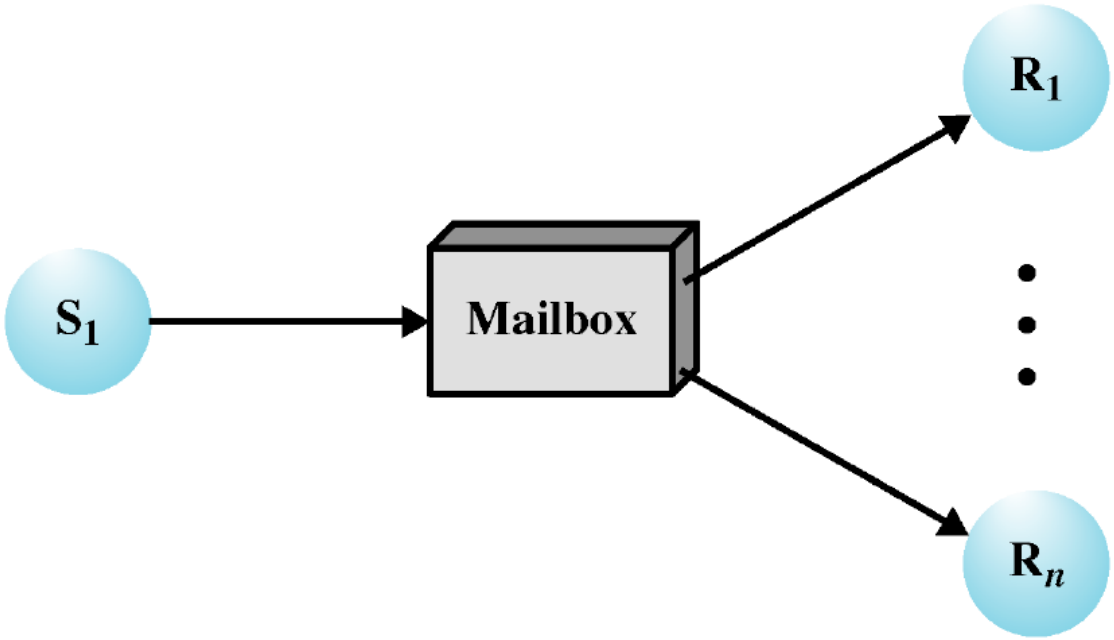

Many-to-Many

- Allows for many-to-many communication

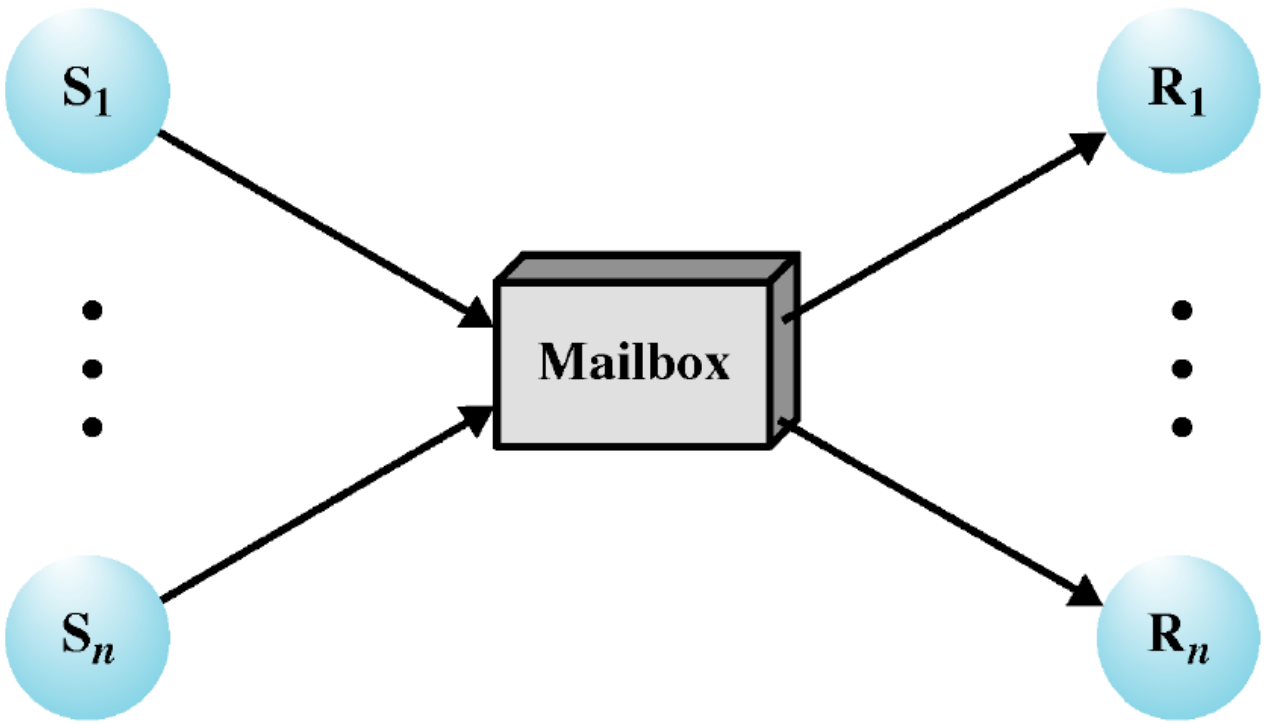

Indirect Communication – Example

- Mailbox sharing
  - P1, P2, and P3 share mailbox A
  - P1, sends; P2 and P3 receive
  - Who gets the message?

- Possible solutions
  - Allow a link to be associated with at most two processes
  - Allow only one process at a time to execute a receive operation
  - Allow the system to select arbitrarily the receiver
    - Sender is notified of the receiver

Indirect Communication – Ownership

- Could be either process or Operating System
- Case process is the owner of a mailbox
  - Owner performs as the receiver of messages
  - User sends messages to the mailbox
    - Mailbox destroyed with termination of the process
- Case OS is the owner
  - Need support for processes to
    - Create
    - Send and receive messages through the mailbox
    - Delete a mailbox
  - Manage ownership
  - Possibly multiple owners/ receivers

Synchronization

- Message passing may be either blocking or non-blocking

- Blocking is considered synchronous
  - Blocking send has the sender block until the message is received
  - Blocking receive has the receiver block until a message is available

- Non-blocking is considered asynchronous
  - Non-blocking send has the sender send the message and continue
  - Non-blocking receive has the receiver receive a valid message or null

- Combinations of blocking and non blocking calls
  - Blocking send + blocking receive
    - Tight coupling between processes
  - Non blocking send + blocking receive

Buffering

- All messaging system require framework to temporarily buffer messages (i.e., Queues)

- Zero capacity
  - No messages may be queued within the link
  - Requires sender to block until receiver retrieves message

- Bounded capacity
  - Link has finite buffer capacity to hold messages
  - If link is full then sender must block until one is freed up

- Unbounded capacity
  - Link has unlimited buffer space
  - Send never needs to block

IPC Case Study: Unix Pipes

Process Creation Recap

- Consider the following code

```
for(int i = 0; i < 4; i++){
    fork();
}
```

- How many process would be created?
- Represent the processes in form of tree

Unix IPC

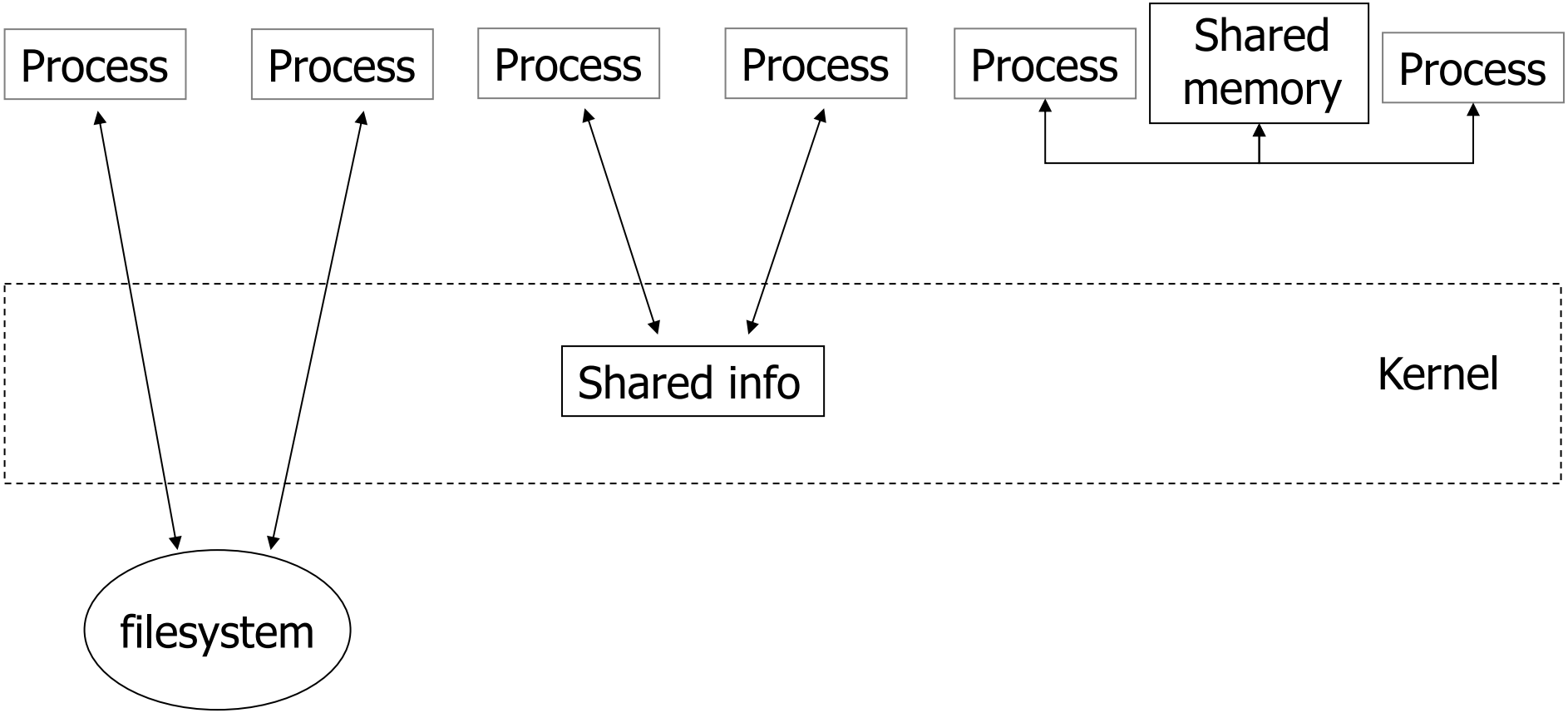
Process
Process
Process
Process
Process
Shared memory
Process
Shared info
Kernel
filesystem

File Descriptors

- PCB of each process keeps track of open files
- Pointer to `file_struct`, a kernel-resident array data structure containing the details of open files

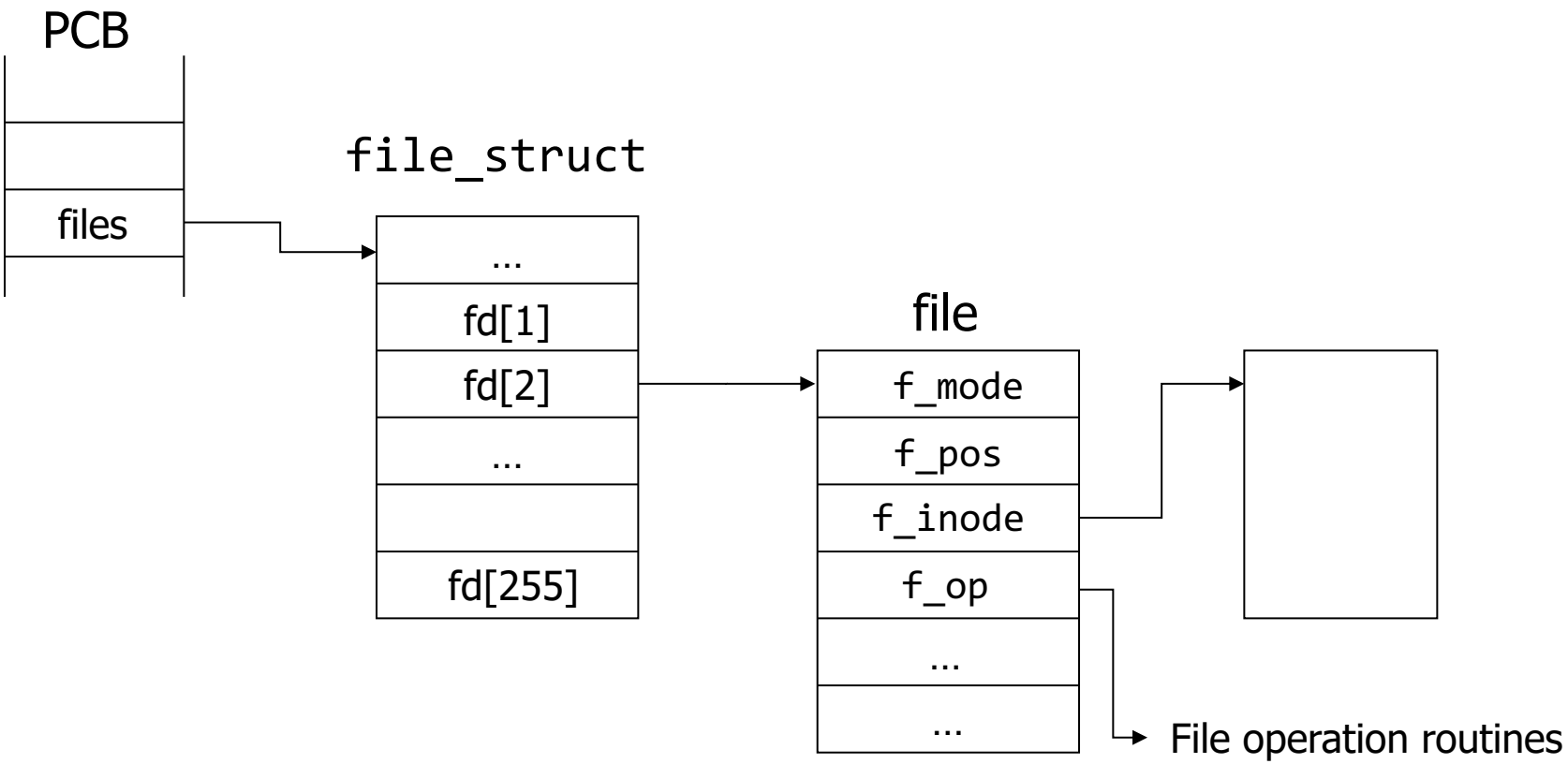

File Descriptors

- `files_struct` contains pointers to file data structures
  - Each one describes a file being used by this process
- `f_mode:` Describes file mode, read only, read and write or write only
- `f_pos:` Holds the position in the file where the next read or write operation will occur
- `f_inode:` Points at the actual file

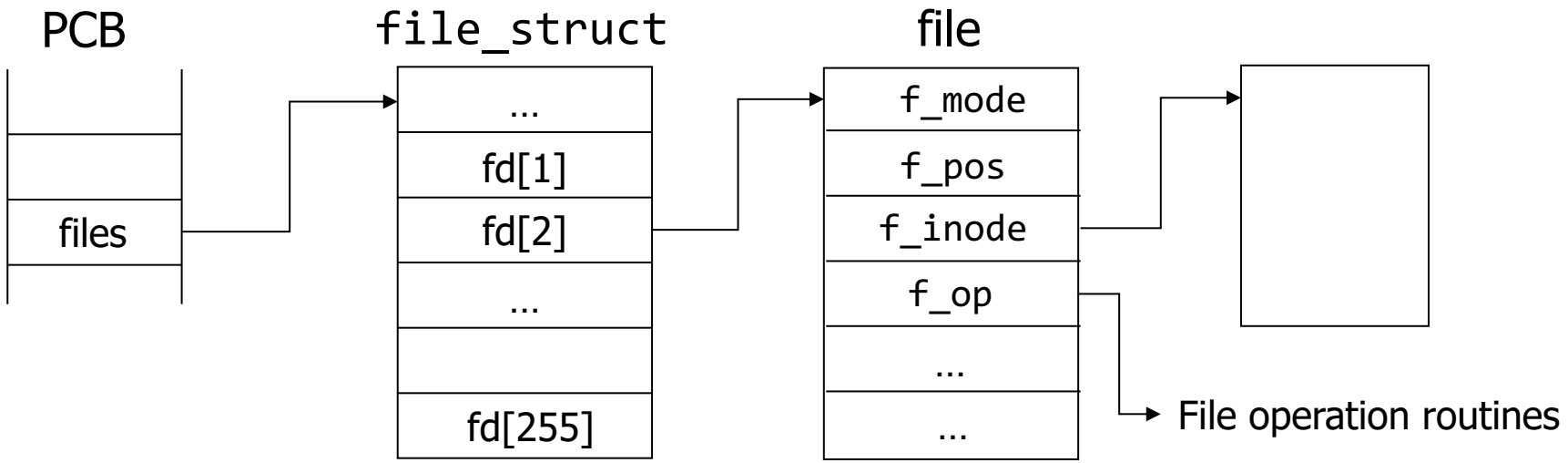

File Descriptors

- When a process opens a file, one of the free file pointers in the `files_struct` is used to point to the new file structure
- When Unix processes do any sort of I/O, they do it by reading or writing to a file descriptor
  - A file descriptor is simply an integer associated with an open file
- All accesses to files are via standard system calls which pass or return file descriptors

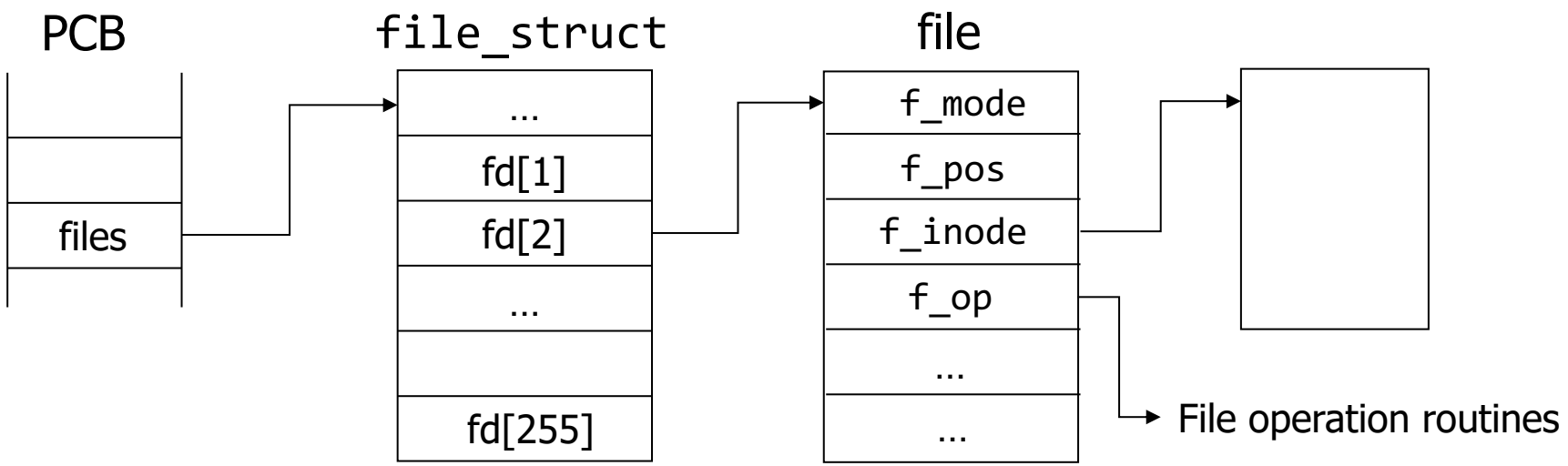

Standard Input, Output, Error

- Linux processes expect three file descriptors to be open when they start
  - Standard input: File descriptor 0 (`stdin`)
  - Standard output: File descriptor 1 (`stdout`)
  - Standard error: File descriptor 2 (`stderror`)

- These three are usually inherited from the creating parent process

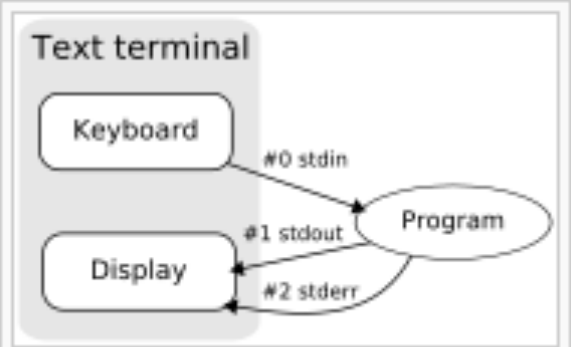

The file descriptors for input, output, and error

Standard Input, Output, Error: Example

- Read from standard input (by default it is keyboard)
  - `char buffer[10];`
  - `read(0,buffer,5);`

- Write to standard output (by default is is monitor))
  - `char buffer[10];`
  - `write(1,buffer,5);`

- By changing the file descriptors we can write to files

- `fread/fwrite` etc. are wrappers around the above `read/write` functions

Unix Fact

- Everything in Unix is a file

- A file in Unix can be
  - A network connection
  - A FIFO queue
  - A pipe
  - A terminal
  - A real on-the-disk file
  - Or just about anything else

Pipes

- Pipes represent a channel for Interprocess Communication
  - Provides a one-way flow of data
  - Can be thought as a special file that can store a limited amount of data in a first-in-first-out manner, exactly akin to a queue

Pipes

- Shared info in kernel's memory

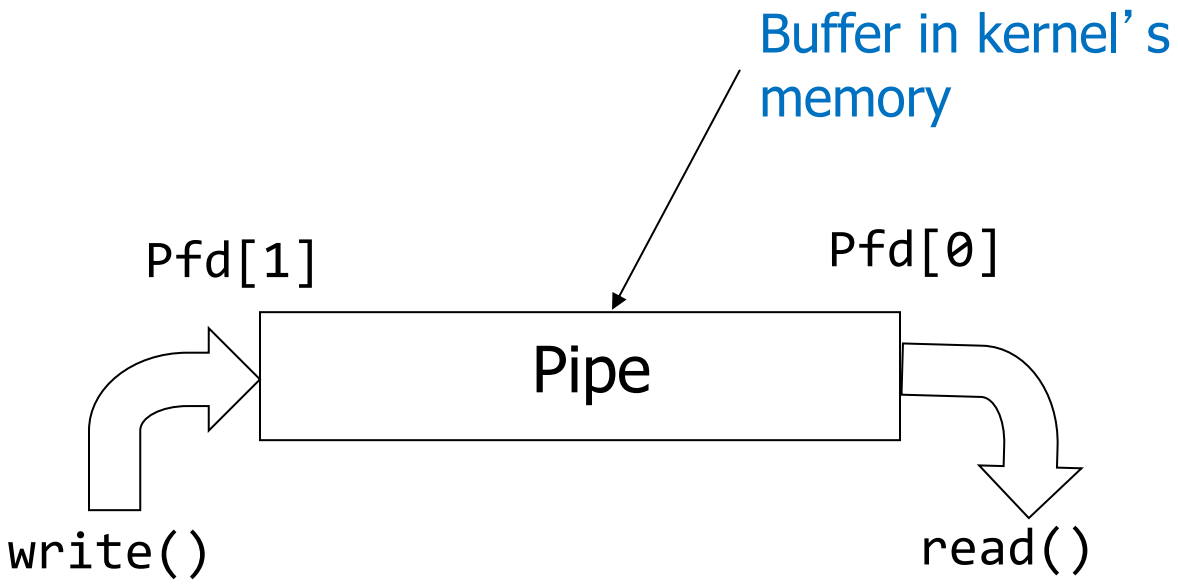

Pipes

- A pipe is implemented using two file data structures which both point at the same temporary data node
- This hides the underlying differences from the generic system calls which read and write to ordinary files
- Thus, reading/writing to a pipe is similar to reading/writing to a file

Pipes

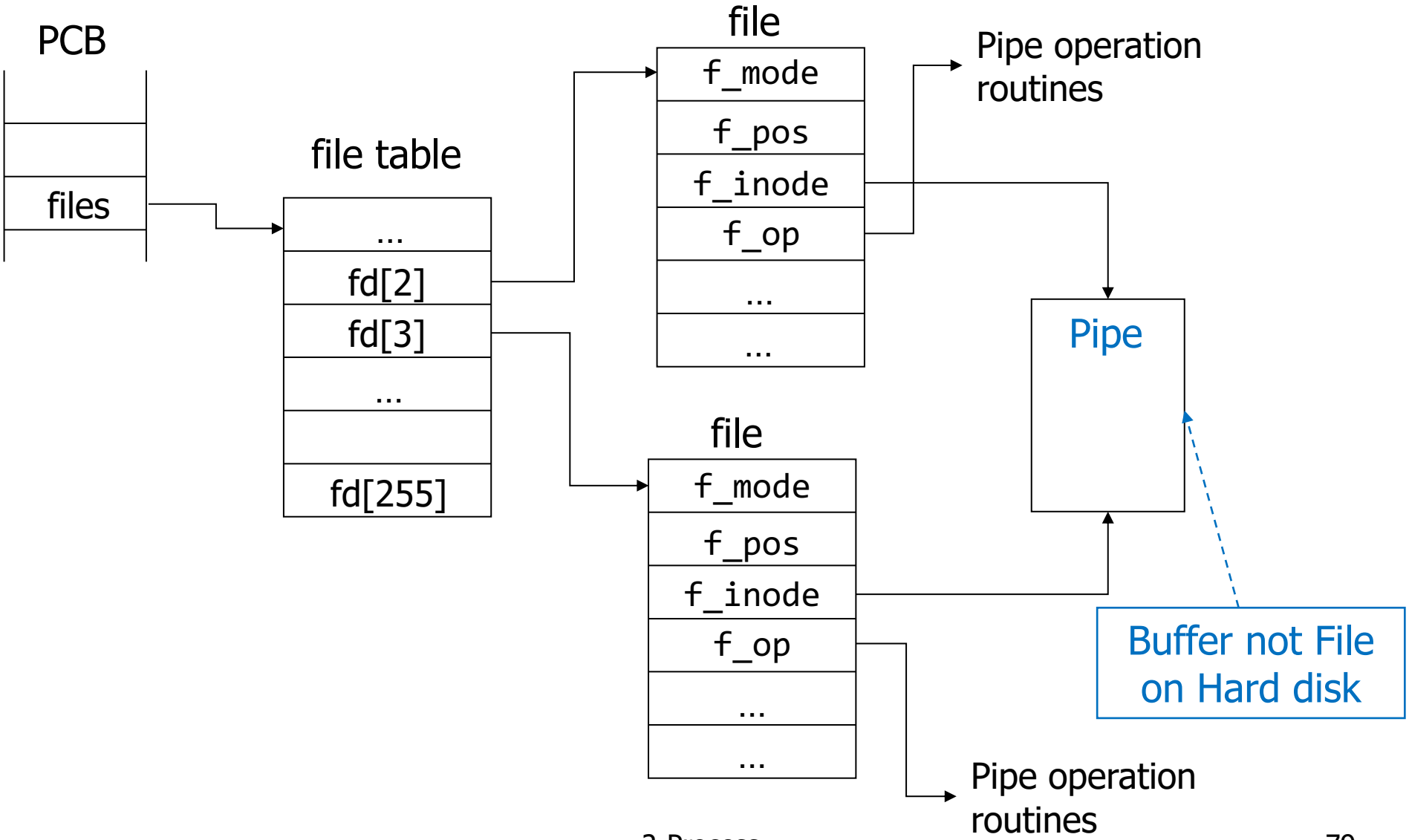
PCB
files
file table
...
fd[2]
fd[3]
...
fd[255]
file
f_mode
f_pos
f_inode
f_op
...
...
Pipe operation routines
Pipe
file
f_mode
f_pos
f_inode
f_op
...
...
Buffer not File on Hard disk
Pipe operation routines

(Unnamed) Pipe Creation

Two methods for creating (unnamed) pipes

- `pipe` system call

```
#include <unistd.h>
int pipe(int filedes[2]);
```

  - Creates a pair of file descriptors pointing to a pipe inode
  - Places them in the array pointed to by `filedes`
    - `filedes[0]` is for reading
    - `filedes[1]` is for writing
  - Return value: Success returns zero; error returns -1
- `popen` system call

```
FILE *popen(const char *command, const char *type);
FILE* file = popen("ntpdate", "r");
```

  - Opens a process by creating a pipe, forking, and invoking the shell

Pipe Creation

```
int main()
{
    int pfds[2];
    if (pipe(pfds) == -1)  {
        perror("pipe");
        exit(1);
    }
}
```

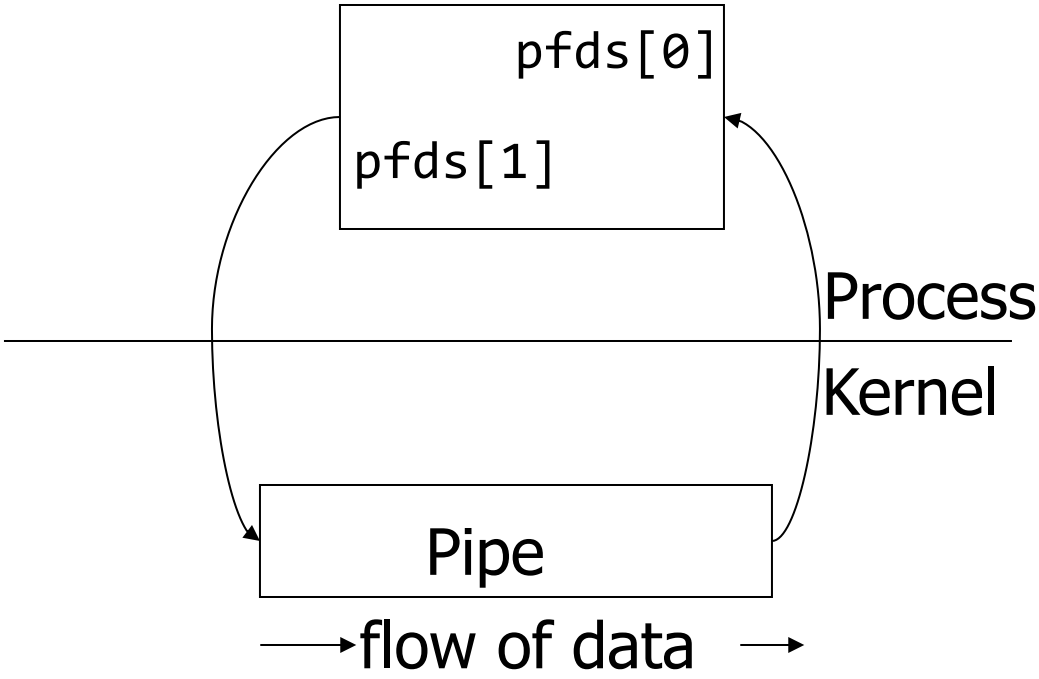

Pipe Example

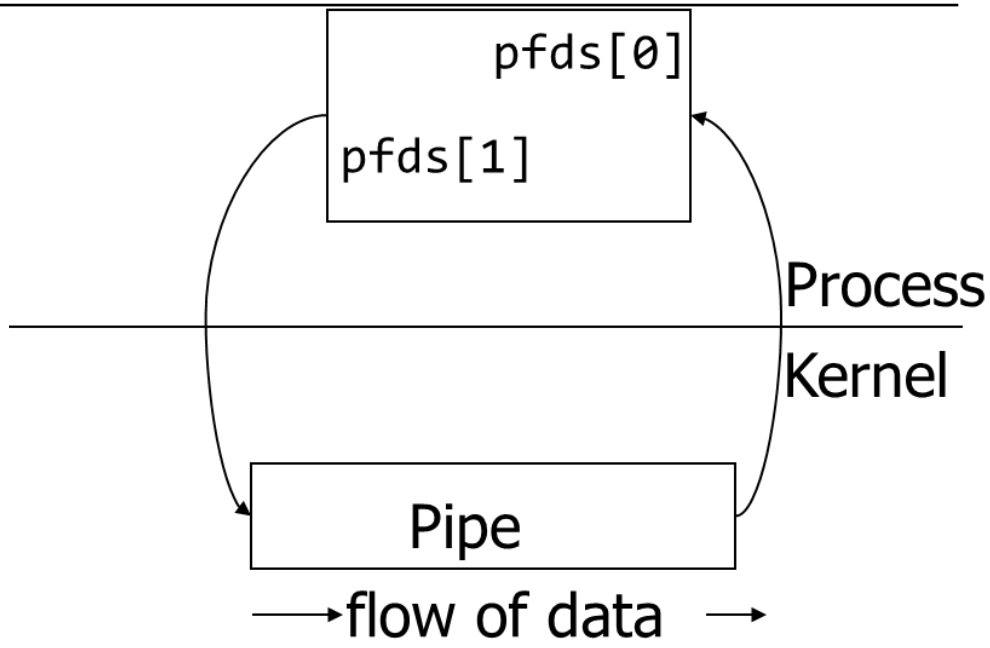


```
int main()
{
    int pfds[2];
    if (pipe(pfds) == -1)  {
        perror("pipe");
        exit(1);
    }
    printf("writing to file descriptor #%d\n", pfds[1]);
    write(pfds[1], "test", 5);
    printf("reading from file descriptor #%d\n",pfds[0]);
    read(pfds[0], buf, 5);
    printf("read %s\n", buf);
}
```

A Channel Between Parent and Child

- Child is created by a `fork()` call executed by the parent
  - Child process is an image of the parent process
  - All the file descriptors that are opened by the parent are available in the child

- Pipe is inherited by the child
  - File descriptors refer to the same I/O entity
  - Pipe may be passed on to the grand-children by the child process or other children by the parent

Piping Between Parent and Child

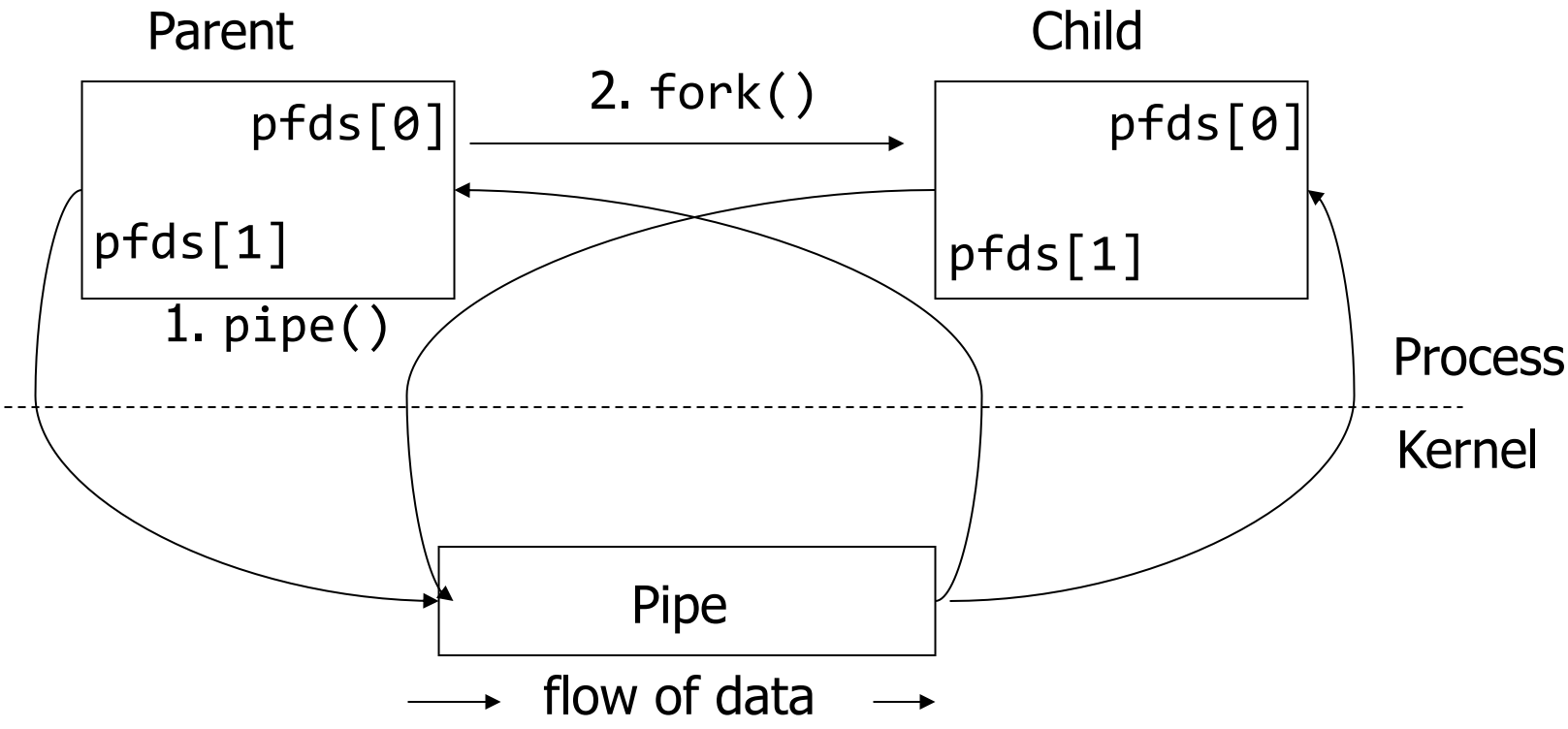

Piping Between Parent and Child

- To allow one way communication each process should close one end of the pipe

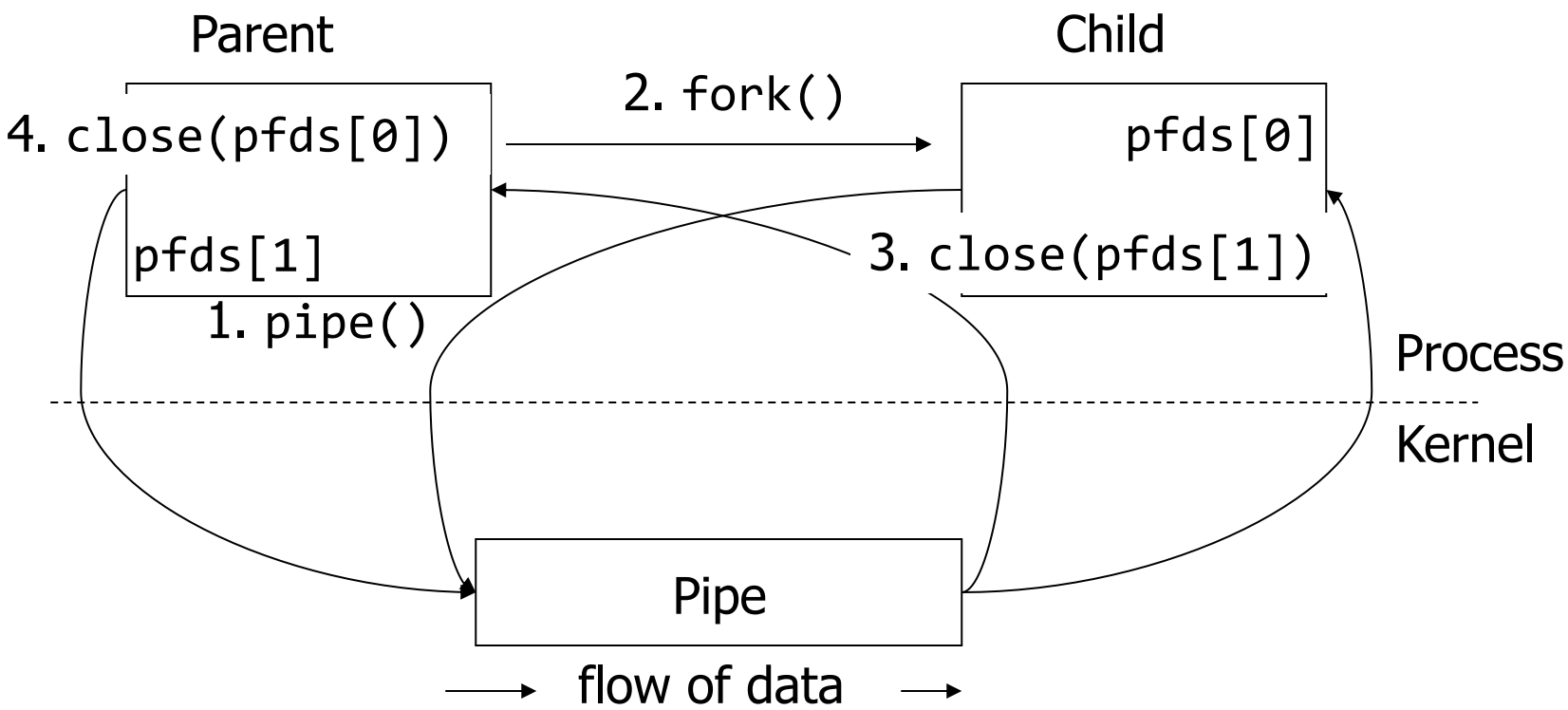

Pipe Closing

- The file descriptors associated with a pipe can be closed with the `close(fd)` system call
- A pipe exists until both file descriptors are closed in all processes
- How would we achieve two way communication?

Pipe Example

```
int main() {
    int pfds[2];  char buf[30];
    pipe(pfds);
    if (!fork()) {
        close(pfds[0]);
        printf(" CHILD: writing to the pipe\n");
        write(pfds[1], "test", 5);
        printf(" CHILD: exiting\n");
        exit(0);
    }
    else {
        close(pfds[1]);
        printf("PARENT: reading from pipe\n");
        read(pfds[0], buf, 5);
        printf( "PARENT: read \"%s\"\n", buf);
        wait(NULL);
    }
}
```

Full Duplex Communication via Two Pipes

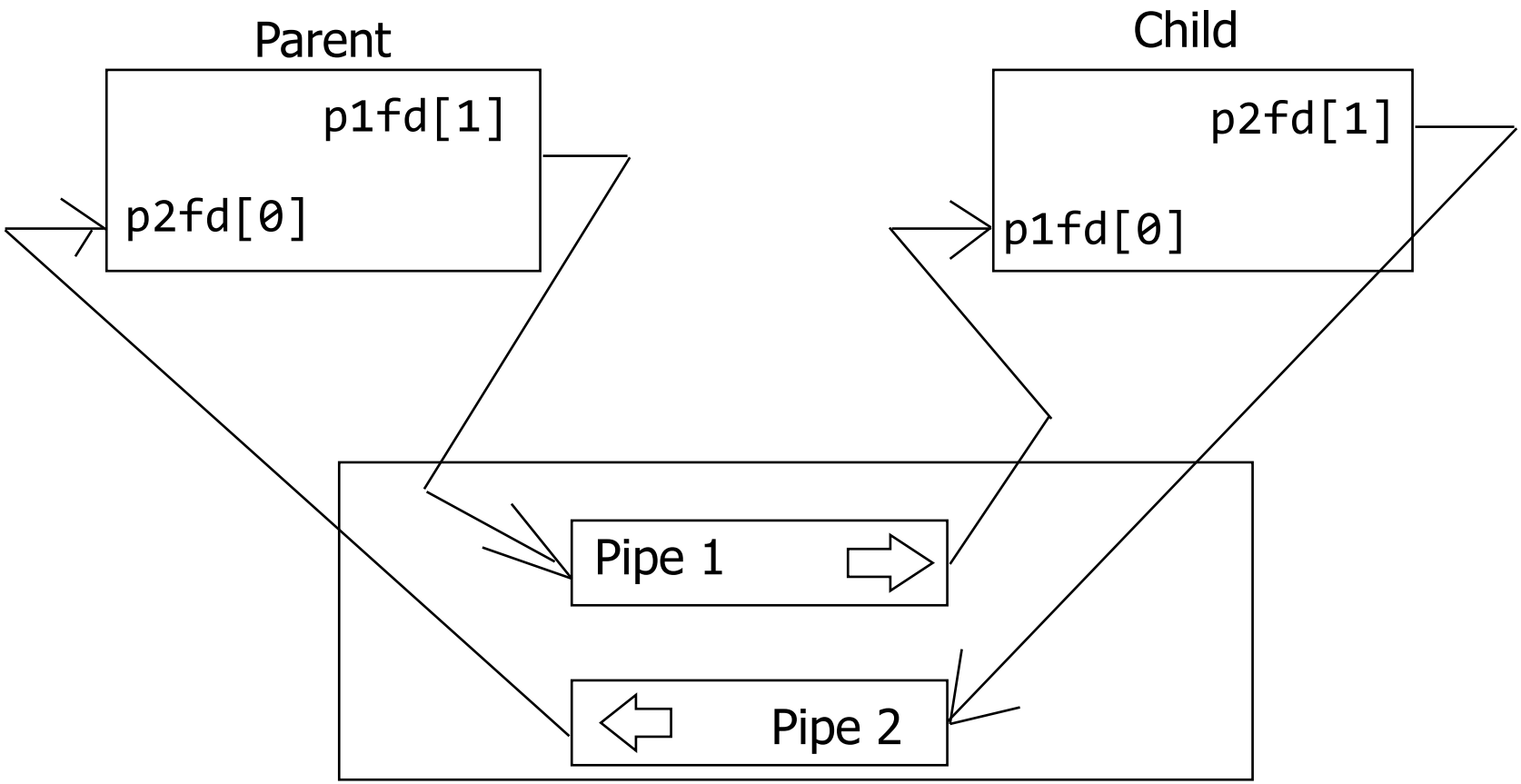

Named vs. Unnamed Pipes

Unnamed pipe

- Unnamed pipes can only be used between related process, such as parent/child, or child/child process
- Unnamed pipes can exist only as long as the processes using them

Named pipe

- When created, named pipes have a directory entry
  - Have file access permissions for unrelated processes to use the pipe
- Named pipes can be created by using `mkfifo` system call
  - `int mkfifo(const char *pathname, mode_t mode);`
  - Makes a FIFO special file with name `pathname` and FIFO's permissions
- Any process can open FIFO special file for reading or writing
  - Opening a FIFO for reading normally blocks until some other process opens the same FIFO for writing, and vice versa

Named Pipe Example

Process 1

```
int main() {
   int fd;
   char * myfifo = "/tmp/myfifo";
   /* create the FIFO(named pipe)*/
   mkfifo(myfifo, 0666);

   /* write "Hi" to the FIFO */
   fd = open(myfifo, O_WRONLY);
   write(fd, "Hi", sizeof("Hi"));
   close(fd);

   /* remove the FIFO */
   unlink(myfifo);

   return 0;
}
```

Process 2

```
#define MAX_BUF 1024

int main() {
   int fd;
   char * myfifo = "/tmp/myfifo";
   char buf[MAX_BUF];

   /* open, read, and display the
      message from the FIFO */
   fd = open(myfifo, O_RDONLY);
   read(fd, buf, MAX_BUF);
   printf("Received: %s\n", buf);
   close(fd);

   return 0;
}
```

Redirecting Standard I/O

- Redirection of `stdin`, `stdout` and `stderr` in Unix and Linux

<< or 0<<	redirect `stdin` within command
> or 1>	redirect `stdout` to file (overwrite if file not empty)
>> or 1>>	redirect `stdout` to file (append if file not empty)
2>	redirect `stderr` to file (overwrite if file not empty)
2>>	redirect `stderr` to file (append if file not empty)

- Redirecting data from one program to another
  - `ls | head -3`
  - `ls | head -3 | tail -1`
  - `ls | head -3 | tail -1 > myoutput`

Redirecting Standard I/O

Program

```
main( int ac, char *av[]){
   int i;
   printf ("No. of args: %d, Args:\n", ac);
   for (i=0; i < ac; i++)
      printf ("args[%d]: %s\n", i, av[i]);

   fprintf (stderr, “Msg sent to stderr.\n");
}
```

```
$ listargs > output 2> error

$ cat output
No. of args: 1, Args:
args[0]: listargs

$ cat error

Msg sent to stderr.

$ listargs arg1 > output 2>error

$ cat output
No. of args: 2, Args:
args[0]: listargs
args[1]: arg1
```

Redirection in C Programs

- Processes do not read from files, they read from file descriptors

- Close / Open Method:

```
close(0);                        /* file descriptor 0 – i.e. stdin */
open(filename, O_RDONLY);        /* redefines lowest file descriptor */
```

- Open / Close / Dup / Close / Method:

```
fd=open(filename, O_RDONLY);  /* open file to read - fd */
close(0);                     /* close file descriptor 0 – i.e.
                                 stdin */
newfd=dup(fd);                /* make "clone" of fd and
                                 uses lowest next available fd –
                                 I.e. 0 that was closed */
close(fd);                    /* close original fd associated
                                 with file. Now, stdin is
                                 associated with file…   */
```

dup2 is similar to dup, but dup2 will automatically `close(0)`.
For example, `newfd=dup2(fd,0);`

Any Question So Far?